FuehlerSysteme eNET International
The Brand for Sensor Technology

Sensor Technology and Field Devices

Modbus

Catalogue 2020

Roethensteig 11
90408 Nuremberg
+49 911 37322-0
+49 911 37322-111
www.fuehlersysteme.com

FuehlerSysteme eNET International GmbH

We have been a developer, manufacturer and sales of innovative sensors and field devices for industrial, building and process automation based in Nuremberg for over 15 years.

Our measuring devices record precise environmental conditions, e.g. temperature, humidity, pressure, CO, CO2, VOC, O2, particulate matter, flow, brightness, movement, meteorological parameters and much more. "Made in Germany".

Our Multi-Sensor-Platform with up to 8 different sensors offer over 200 possible combinations for your individual Multi-Sensor-Measuring device.

With the development of innovative digital multi-sensors, miniaturized multi-radio-sensors, I/O devices, IOT-Gateways and Cloud-Solutions, we are setting new standards in many areas of Industry 4.0.

We offer solutions for warehouse and transport monitoring, predictive maintenance, trend analysis, anomaly detection, retrofitting of existing systems and much more.

We look forward to offering you customized solutions for your pojects!

Marcel Jaruga
Managing Director

Alexander Lohse
Managing Director

Innovations 2020

FS1600

Multi-Sensor-Platform
- 8 different Sensors
- 200 possible combinations
- Modbus® RTU

Page 230

FS1309/FS4309

Oxygen O2 Measuring
- 0...25% vol. optional 0...100% vol.
- output 0-10 V (→ p.179)
- Modbus® RTU (→ p.281)

FS1308/FS4408

- **Particle / Fine Dust Measuring**
- 0 - 1000 µg/m³
- 0-10 V, 4-20 mA (→ p.177)
- Modbus® RTU (→ p.279)

FS1701-1703

I/O Devices
- Analog / Modbus® RTU (→ p.292)
- Modbus® RTU / Analog (→ p.292)
- Modbus® RTU / Relay Module (→ p.293)

FS1704

Servicedisplay
- 3 configurable display levels
- Input Modbus® RTU
- DIN rail assembly

Page 293

Exhibitions 2020

light+building

Frankfurt a.M., 08.03.-13.03.2020
Hall 9.1 / Booth B70

World's leading trade fair for lighting and building technology

SENSOR+TEST 2020
DIE MESSTECHNIK-MESSE
The Measurement Fair

Nuremberg, 23.06.-25.06.2020
Halle 1 – Booth 324

The leading forum for sensors, measuring and testing technologies worldwide

sps
smart production solutions

Nuremberg, 24.11.-26.11.2020
Hall 4A – Booth 425

Europe's leading trade fair for electric automation - systems and components

HANNOVER MESSE

Hannover, 20.04.-24.04.2020
Hall 16 – Booth E18/11

World's leading trade fair for industry

We are member of

AMA Verband für Sensorik + Messtechnik
Linking Innovators

Modbus MEMBER

Automation Valley Nord-Bayern

Cluster Sensorik

Temperature Sensors 252 38
Temperatur Transducers 242 64
Thermocouples 88
Temperature Room Control Units 96
Humidity 256 104
Humidity continuous heated sensor... 256 110
Humidity & Temperature 256 114
Hygrostats 130
Pressure 266 132
Submersible Pressure 138
Pressure Switches 140
relative/Absolute Pressure 144
Mixed Gas VOC 270 150
Air Quality CO2 ..... 270 156
Air Quality CO 270 170
Particulate Matter 278 176
Oxygen O2 ..... 280 178
Smoke Detectors 180
Flow Transducers 282 182
Flow Controllers 186
Brightness & Motions 286 188
Weather Stations 200 200
Meteorology 206
Accessoires 218
Multi-Sensor-Transducers 230 146
Modbus Special Devices 290
Connection Drawings 294
Dimension Drawings 322
Prices 376

Temperature Sensors

CONTACTING

LF1/E Contacting Temperature Sensor with Silicone Cable and Clamping Band 40
LF2/E Contacting Temperature Sensor with Clamping Band 40

OUTDOOR

AF1/E Outdoor temperature sensor 41
AF2/E Outdoor temperature sensor with sleeve 41

BAYONET

BF1/E Bayonet temperature probe with 120° measuring peak 42
BF2/E Bayonet temperature probe with plane measuring peak 42

SCREW-IN

EF1/E Screw-in temperature sensor with brass immersion sleeve 43
EF2/E Screw-in temperature sensor with stainless steel immersion sleeve 43
EF3/E Screw-in temperature sensor with terminal head form B 44
EF4/E Screw-in temperature sensor with terminal head form B and neck tube 44
EF5/E Screw-in temperature sensor with silicone cable 45
EF6/E Screw-in temperature sensor with terminal head form J 45
EF7/E Screw-in temperature sensor with plug connector DIN EN 175301 46
EF8/E Screw-in temperature sensor with M12 plug connector 46

PENETRATION

HE/E Hand infeed temperature probe with PTFE-hand grip and silicone-cable 47
HET/E Hand infeed temperature probe with PTFE-hand grip and PTFE-cable 47

CABLE

KP/E Cable temperature sensor with PVC cable 48
KS/E Cable Temperature Sensor with Silicone Cable 48
KSt/E Cable Temperature Sensor with Glass Fibre/Stainless Steel Netting 49
KT/E Cable Temperature Sensor with PTFE Cable 49
LP/E Temperature Sensor with Perforated Protection Sleeve and PVC Cable 50

DUCT

KF1/E Duct temperature sensor with mounting flange 50
KF2/E Duct temperature sensor with terminal head form J 51
KF3/E Duct temperature sensor with terminal head form B 51

MANTLE

MWT/E Mantle Resistance Thermometer 52

AVERAGE-VALUE

MF/E Average Temperature Value Sensor 52

SURFACE

OF1/E Surface Temperature Sensor - Self-adhesive ... 53
OF2/E Surface Temperature Sensor - Stainless Steel Block with PVC Cable ... 53
OF3/E Surface Temperature Sensor - Stainless Steel Block with Glass Fibre/Stainless Steel Netting ... 54
OF4/E Surface Temperature Sensor - Magnetic ... 54
OF5/E Surface Temperature Sensor - Stainless Steel Block with Glass Fibre/Stainless Steel Netting ... 55
OF6/E Surface Temperature Sensor - Magnetic with silicone cable ... 55
OF7/E Surface Temperature Sensor - Magnetic with Glass Fibre/Stainless Steel Netting ... 56

PENDULUM

TPF2/E Pendulum Temperature Sensor with Stainless Steel Sleeve ... 56

ROOM

RF/E Room Temperature Sensor ... 57
UP1/E In-Wall Room Temperature Sensor ... 57
DF/E Ceiling temperature sensor ... 58

RADIANT HEAT

ASF/E Radiation temperature sensor - outdoor ... 58
RSF/E Radiation Temperature Sensor - Room ... 59
TPF1/E Radiation Pendulum Temperature Sensor ... 59

IMMERSION

TF1/E Immersion Temperature Sensor with Housing ... 60
TF4/E Immersion Temperature Sensor with Housing and Flexible Silicone Cable ... 60

CONTACT

TF5/E Immersion Temperature Sensor with Silicone Cable ... 61
TF7/E Immersion Temperature Sensor with Plug Connector DIN EN 175301 ... 61
TF8/E Immersion Temperature Sensor with M12 Plug Connector ... 62

Temperature Transducers

CONTACTING

LM1/E Contact temperature transducer with silicon cable and strap 66
LM2/E Contact temperature transducer with strap 67

OUTDOOR

AM1/E Outside temperature transducer 68
AM2/E Outside temperature transducer with sleeve 69
AM5/E Outside temperature transducer with EMC thread 70

SCREW-IN

EM/E Screwable temperature transducer with brass immersion sleeve 71
EM2/E Screwable temperature transducer with stainless steel immersion sleeve 72
EM3/E Screwable temperature transducer with connection head form B 73
EM4/E Screwable temperature transducer with connection head form B and neck tube 74
RM2/E Screwable temperature transducer with connection head form B and neck tube for high temperatures 75
EM5/E Screwable temperature transducer with silicon cable 76

CABLE

KSM/E Cable temperature transducer with silicon cable 77
KTM/E Cable temperature transducer with PTFE cable 78

DUCT

KM/E Duct temperature transducer 79

AVERAGE VALUE

MM/E Average temperature transducer 80

SURFACE

OM1/E Surface temperature transducer–self-adhering 81
OM3/E Surface temperature transducer with stainless steel block 82
OM4/E Surface temperature transducer with magnet 83

PENDULUM

TPM2/E Temperature transducer with stainless steel room pendulum 84

ROOM

RTM1/E Room temperature transducer 85

RADIATION HEAT

UM1/E Flush-mounted room temperature transducer 86
TPM1/E Radiated pendulum temperature transducer with aluminium sphere 87

Thermocouples

BAYONET

BF1/T Bayonet thermocouple with 120° measuring peak 89
BF2/T Bayonet thermocouple with plane measuring peak 89

SCREW-IN

EF4/T Screw-in thermocouple with terminal head form B and neck tube 90

PENETRATION

HE/T Hand infeed thermocouple with PTFE-hand grip and silicone-cable 90

CABLE

KS/T Cable thermocouple with TC mini-connector 91

MANTLE

MT1/T Sheathed thermocouple with TC-mini-connector 91
MJP/E Sheathed thermocouple type J with 2 m PVC-cable 92
MJS/E Sheathed thermocouple type J with 2 m silicone-cable 92
MJG/E Sheathed thermocouple type J with 2 m glass fibre-/stainless steel cable 93
MKP/E Sheathed thermocouple type K with 2 m PVC-cable 93
MKS/E Sheathed thermocouple type K with 2 m silicone-cable 94
MKG/E Sheathed thermocouple type K with 2 m glass fibre-/stainless steel cable 94
MLS/E Sheathed thermocouple type L with 2 m silicone cable 95

THERMOCOUPLES

TPK/E Thermocouples type K with TE mini-connector 95

Room Control Units

ON-WALL

RF1/R Room Temperature Sensor with Potentiometer 98
RF2/R Room Temperature Sensor with Push-Button and LED 98
RF3/R Room Temperature Sensor with Potentiometer and Rotary Switch 99
RF4/R Room Temperature Sensor with Potentiometer, Push-Button and LED 99
RF5/R Room Temperature Sensor with Poti, Push-Button and 2 LEDs 100
RF6/R Room Temperature Sensor with Poti, Rotary Switch, Rocker Switch, 4 Buttons and 4 LEDs 100

IN-WALL

UP1/R In-Wall Room Temperature Sensor with Potentiometer 101
UP2/R In-Wall Room Temperature Sensor with Push-Button and LED 101
UP3/R In-Wall Room Temperature Sensor with Potentiometer and Rotary Switch 102
UP4/R In-Wall Room Temperature Sensor with Potentiometer, Push-Button and LED 102
UP5/R In-Wall Room Temperature Sensor with Poti, Rotary Switch and 2 LEDs 103

Humidity Transducers

ON-WALL

RAF/A Humidity transducer 106
RAF(H)/A Humidity transducer, high precision with calibration certificate 106

DUCT

RKF/A Humidity transducer for ducts 107
RKF(H)/A Humidity transducer for ducts, high precision with calibration certificate 107

INDOOR

RRF/A Humidity transducer for indoors 108
RRF(P)/A Humidity transducer with pendulum sensor 108
RDF/A Humidity transducer for ceiling installation 109
FS3110 Humidity transmitter on-wall, continuous heated sensor, active output (0-10 V or 4-20 mA) 112

Humidity continuous heated sensor

ON-WALL

FS3130 Humidity transmitter duct, continuous heated sensor, active output (0-10 V or 4-20 mA) 112

DUCT

RAFT/A Humidity / temperature transducer 116

Humidity & Temperature

ON-WALL

FS3101 Humidity / temperature transducer, protection tube 190mm 117
RAFT(H)/A Humidity / temperature transducer, high precision with calibration certificate 118
RAFTP/A Humidity transducer with passive temperature output 119
RKFT/A Humidity / temperature transducer for ducts 120
RKFT(H)/A Humidity / temperature transducer for air ducts, high precision with calibration certificate . 121
RKFTP/A Humidity transducer with passive temperature output for ducts 122

DUCT

FS3135 Humidity transmitter with screw-in thread, active output (0-10 V or 4-20 mA) 123

COMPRESSED AIR

RRFT/A Humidity / temperature transducer for indoors 124

INDOOR

RRFTP/A Humidity transducer with passive temperature output for indoors 125
RRFT(P)/A Humidity / temperature transducer for pendulum sensors 126
RRFTP(P)/A Humidity transducer with passive temperature output and pendulum sensors 127
RDFT/A Humidity / temperature transducer for ceiling installation 128

CONTACTING

TW/A Dew point controller 129

HYGROSTATS

RAF/M Hygrostat, electronic 131
RKF/M Duct hygrostat, electronic 131

Pressure Transducers

PRESSURE DIFFERENCE/VOLUME FLOW/AIR PRESSURE

DMU/A Pressure transducer for pressure difference and volume flow, active output 134
DMU2/A Pressure transducer for pressure difference with EMC thread 135
AD/A Pressure transducer for atmospheric / barometric pressure 136

SUBMERSIBLE PRESSURE

FS3540 Submersible pressure transmitter for level measurement, activ output (4-20mA) 139

PRESSURE SWITCHES

FS3610 Pressure Switch for Non-aggressive Gases, mechanical 142
DW/H Differential pressure switch for liquid with adjustable setting 143

RELATIVE/ABSOLUTE PRESSURE

DT/D Pressure transducer for relative pressure 145
ADF/A Pressure transducer for absolute pressure 145

Multifunctional Air Quality Sensors

CO2-M/A Multifunctional air quality sensor for CO2, VOC, humidity, temperature and air pressure 149
CO-M/A Multifunctional air quality sensor for CO, VOC, humidity, temperature and air pressure 149

Air Quality VOC

DUCT

KL/A Duct air quality sensor for mixed gas (VOC) 152
KLT/A Duct air quality sensor for mixed gas (VOC) and temperature 152

INDOOR

RL/A Room air quality sensor for mixed gas (VOC) 153
RLT/A Room air quality sensor for mixed gas (VOC) and temperature 153
RL2/A Room air quality sensor for mixed gas (VOC) with LED display 154
RLU/A Flush mounted air quality sensor for mixed gas (VOC) 154

Air Quality CO2

ON-WALL

CO2-A/A CO2 air quality sensor with measurement range switch 158
CO2T-A/A CO2 and temperature sensor with measurement range switch 159
CO2VOC-A/A CO2 and mixed gas VOC air quality sensor with measurement range switch 160

DUCT

CO2-K/A CO2 air quality sensor for ducts with measurement range switch 161
CO2T-K/A CO2 and temperature sensor for ducts with measurement range switch 162
CO2VOC-K/A CO2 and mixed gas VOC air quality sensor for ducts with measurement range switch 163

INDOOR

CO2-R/A CO2 air quality sensor for indoors with measurement range switch 164
CO2T-R/A CO2 and temperature sensor for indoors with measurement range switch 165
CO2VOC-R/A CO2 and mixed gas VOC air quality sensor for indoors with measurement range switch 166

IN-WALL

CO2-U/A CO2 air quality sensor for flush mounting indoors 167

PENDULUM

CO2-P/A CO2 air quality sensor with pendulum sensor, active output (0-10 V or 4-20 mA) 168

Air Quality CO

ON-WALL

CO-A/A CO air quality sensor with measurement range switch 172
COT-A/A CO and temperature sensor with measurement range switch 172

DUCT

CO-K/A CO air quality sensor for ducts with measurement range switch 173
COT-K/A CO and temperature sensor for ducts with measurement range switch 173

INDOOR

CO-R/A CO air quality sensor for indoors with measurement range switch 174
COT-R/A CO and temperature sensor for indoors with measurement range switch 174

Air Quality Particulate Matter

FS4408 Transmitter particulate matter / particles, active output (0-10V and 4-20mA) 177

Air Quality O2

FS4309 Transmitter Oxygen O2, active output (0-10 V) 179

Smoke Detectors

UG-5 Duct smoke detector for air ventilation ducts 181
ST-P-OM Smoke detector for ceiling mounting 181

Flow

DUCT

FS5020 Flow transmitter duct for laminar airflow, volume flow and temperature, active output 184
FS5021 Flow transmitter duct for airflow, volume flow and temperature, active output 184

FLOW CONTROLLERS

SRW/N Flow controller for liquids 187
WFR/N Air flow controller with relay 187

Brightness & Motion

MOTION

BFA/A Motion sensor with infrared sensor 190
BFR/A Motion sensor with infrared sensor for indoors 191
BFD/A Motion sensor with infrared sensor for ceiling installation 192
BFD2/A Mini-Motion sensor with infrared sensor for ceiling installation 193

BRIGHTNESS / MOTION

BHA/A Motion/brightness sensor with infrared sensor and photo-diode 194
BHR/A Motion/brightness sensor with infrared sensor and photo-diode for indoors 195
BHT-D/A Motion/brightness and temperature sensor for ceiling installation 196

BRIGHTNESS

HFA/A Brightness sensor with photo-diode 197
HFR/A Brightness sensor with photo-diode for indoors 198
HFD/A Brightness sensor with photo-diode for ceiling installation 199

Meteorology

WEATHER STATIONS

FS6001 Weather station, active output (0-10 V) 203
FS6002 Weather station with ultrasonic sensors, active output (0-10 V), digital output (Modbus RTU) 204
FS6003 Weather station compact, digital output (Modbus RTU) 205

RAIN/PRECIPITATION

NW1/O Rain sensor 208
NW/O Precipitation monitor with infrared light barrier system 209

WIND

WG2/O Wind speed transmitter - compact 211
WG/O Wind speed transmitter - classic 212
WRG2/O Wind direction transmitter - compact 213
WRG/O Wind direction transmitter - classic 213

PYRANOMETER

GSM/O Pyranometer 215

ACCESSOIRES

ZM/O Meteorology Accessories 216

Accessoires

DT/G	Digital display	218
BN/E	Bayonet nipple	219
KV/E	Compression Clamp	219
MFL/E	Mounting flange	220
MUH/E	Pt100 temperature transducer 0-10 V / 4-20 mA for DIN rail mounting	220
MUB/E	Pt100 temperature transformer head form B 0-10 V / 4-20 mA	221
MUD/E	Pt100 temperature transformer 0-10 V / 4-20 mA with double-PG housing	222
ZT/E	Immersion sleeve	223
TH3/Z	Immersion sleeve with compression clamp	223
ST/E	Connector	224
SWS/A	Radiation and weather protection	224
DTA/D	Adapter for pressure transmitters	225
SAS/D	Hose connection set	225
ST	Venturi pipe for duct smoke detector	226
UG-B	Mounting bracket for duct smoke detector	226
UG-COVER	Protective housing for duct smoke detector	227
SB/E	Snap-on mounting for DIN rails	227
SZ/E	Accessories	228

Temperature Modbus

DUCT

FS1001 Temperature transducer on-wall installation, digital output 244
FS1002 Temperature transducer on-wall installation with sleeve, digital output 244
FS1021 Temperature transducer duct with mounting flange, digital output 245
FS1022 Temperature transducer duct with brass immersion sleeve, digital output 245
FS1023 Temperature transducer duct with stainless steel immersion sleeve, digital output 246

AVERAGE VALUE

FS1030 Temperature transducer with average value sensor, digital output 246

CABEL

FS1040 Temperature transducer with cable sensor silicon cable, digital output 247
FS1041 Temperature transducer with cable sensor PTFE-cable, digital output 247

RADIANT HEAT

FS1042 Temperature transducer with radiation sensor, digital output 248

PENDULUM

FS1043 Temperature transducer with pendulum sensor stainless steel, digital output 248

SURFACE

FS1050 Temperature transducer with self-adhesive surface sensor, digital output 249
FS1051 Temperature transducer with surface sensor and stainless steel block, digital output 249
FS1052 Temperature transducer with magnetic surface sensor, digital output 250

CONTACTING

FS1053 Temperature transducer with contacting sensor, digital output 250
FS1060 Temperature transducer contact with clamping band, digital output 251

INDOOR

FS1080 Temperature transducer room, digital output 251

Temperature 1-Wire

CONTACTING

LF2/B-1W 1-wire contacting temperature sensor with clamping band 254

CABLE

KS/B-1W 1-wire cable temperature sensor with silicone cable 254

IMMERSION

TF1/B-1W 1-wire immersion temperature sensor with housing 255

ROOM

RF/B-1W 1-wire room temperature sensor 255

Humidity Modbus

ON-WALL

FS1100 Humidity transducer on-wall installation for relative/absolute humidity, dewpoint temperature, mixing ratio and temperature, digital output 258

FS1101 Humidity transducer on-wall installation for relative/absolute humidity, dewpoint temperature, mixing ratio and temperature, high-precision with calibration certificate, digital output 259

DUCT

FS1120 Humidity transducer duct for relative/absolute humidity, dewpoint temperature, mixing ratio and temperature, digital output 260

FS1121 Humidity transducer duct for relative/absolute humidity, dewpoint temperature, mixing ratio and temperature, high-precision with calibration certificate, digital output 261

SCREW-IN

FS1135 Humidity transducer compressed air for relative/absolute humidity, dewpoint temperature, mixing ratio and temperature, digital output 262

FS1140 Humidity transducer ceiling for relative/absolute humidity, dewpoint temperature, mixing ratio and temperature, digital output 263

PENDULUM

FS1141 Humidity transducer with pendulum sensor for relative/absolute humidity, dewpoint temperature, mixing ratio and temperature, digital output 264

ROOM

FS1180 Humidity transducer room for relative/absolute humidity, dewpoint temperature, mixing ratio and temperature, digital output 265

Pressure Modbus

DIFFERENCE PRESSURE

FS1200 Pressure transducer for pressure difference, atmospheric/barometric air pressure and volume flow, digital output 268

AIR PRESSURE

FS1205 Pressure transducer for atmospheric and barometric air pressure, digital output 269

Air Quality Modbus

ON-WALL

FS1300 Air quality transducer on-wall for CO2, VOC, humidity and temperature, digital output.....272
FS1301 Air quality transducer on-wall for CO, VOC, humidity and temperature, digital output.....273

DUCT

FS1320 Air quality transducer duct for CO2, VOC, humidity and temperature, digital output.....274
FS1321 Air quality transducer duct for CO, VOC, humidity and temperature, digital output.....275

ROOM

FS1380 Air quality transducer indoor for CO2, VOC, humidity and temperature, digital output.....276
FS1381 Air quality transducer indoor for CO, VOC, humidity and temperature, digital output.....277

PARTICULATE MATTER

FS1308 Transmitter particulate matter, digital output.....279

OXYGEN O2

FS1309 Transmitter Oxygen O2, digital output.....281

Flow Modbus

FS1420 Flow transducer duct for laminar airflow, volume flow and temperature, digital output.....284
FS1421 Flow transducer duct for airflow, volume flow and temperature, digital output.....284

Brightness & Motion Modbus

FS1500 Transducer on-wall for brightness, movement, humidity and temperature, digital output.....288
FS1540 Transducer ceiling for brightness or movement, digital output.....289
FS1580 Transducer indoor for brightness, movement, humidity and temperature, digital output.....289

I/O-Devices, Relay-Modules and Service-Displays

FS1701 I/O - 8 Analog IN / Modbus Out (0-10 V oder 4-20 mA) 292
FS1702 I/O - Modbus In / 8 Analog Out (0-10 V oder 4-20 mA) 292
FS1703 I/O - Modbus In / 8 Relais Out (Wechsler) 293
FS1704 Modbus - Servicedisplay 293

Multi-Sensor Measuring Devices

FS1600 Multi-Sensor Measuring Device, digital output 230

OEM-Service

You are a system provider or would like to become one? In your project, the devices should be labeled to your name? Your own brand should be in the foreground?

Digital print

We print your CI on the label and housing. Our modern UV printer enables multi-color, digital printing with up to 16.7 million colors.

Fast delivery

Benefit from our simple and fast order processing with delivery times from one working day (when placing a call order). Even with small lot sizes per order!

In Only 6 Steps Quick and Easy to your Own Brand:

1 You opt for an OEM variant:
Label, cover printing, user manual

2 You send us your brand label as file
(format EPS, AI, CRD, DXF etc.)

3 We send you an example for release

4 In case of cover printing you decide about the order quantity

5 You order your goods as usual

6 We produce and deliver within 3 – 5 working days
(by placing a call-off order within 1 working day)

Label Printing (single-colour)	Price
Printing plate (one-time)	at cost
Label printing per unit	from 0,50 €

Cover Printing (multi-colour)	Price
100 pieces	from 4,00 € / pcs
200 pieces	from 2,50 € / pcs
300 pieces	from 1,50 € / pcs

User Manual	Price
Standard/neutral	free
Providing your own user manual	free
OEM user manual	at cost

Minimum Batch Size	Price
Passive sensors	from 50 pieces
Active sensors	from 20 pieces

Customizing

YOUR project, YOUR measuring task - OUR Solution for YOUR Application

Individual Solution

You are seeking an individual solution, specifically customized to your requirements? For us, customizing means using our competence and ideas to create solutions for each individual customer.

Suitable logistics concepts

Starting from the simple private label brand through producing customer-specific matches for standard products up to the custom-made special niche product.

This all involves individual packaging solutions, accessory pack for accessories required and suitable logistics concepts.

Requirement **Consulting** **Offer**

Our Customizing-Team

concentrates application and product knowledge and offers you

- fast conversion of the idea to the series
- short cuts through development and
- production in own hands
- high quality and reliability „Made in Germany“
- incomparable supply performance
- through strong logistics partners and
- intelligent logistics management

Sampling **Release** **Production**

Customizing

Custom made sensing device for YOUR own use

We manufacture according to your specification

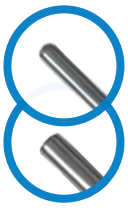

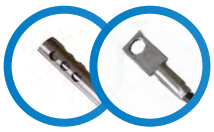

Tubing

- perforated
- fixing hole
- conical
- etc.

- Ø 6 mm
- Ø 3 mm
- etc.

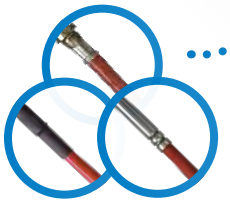

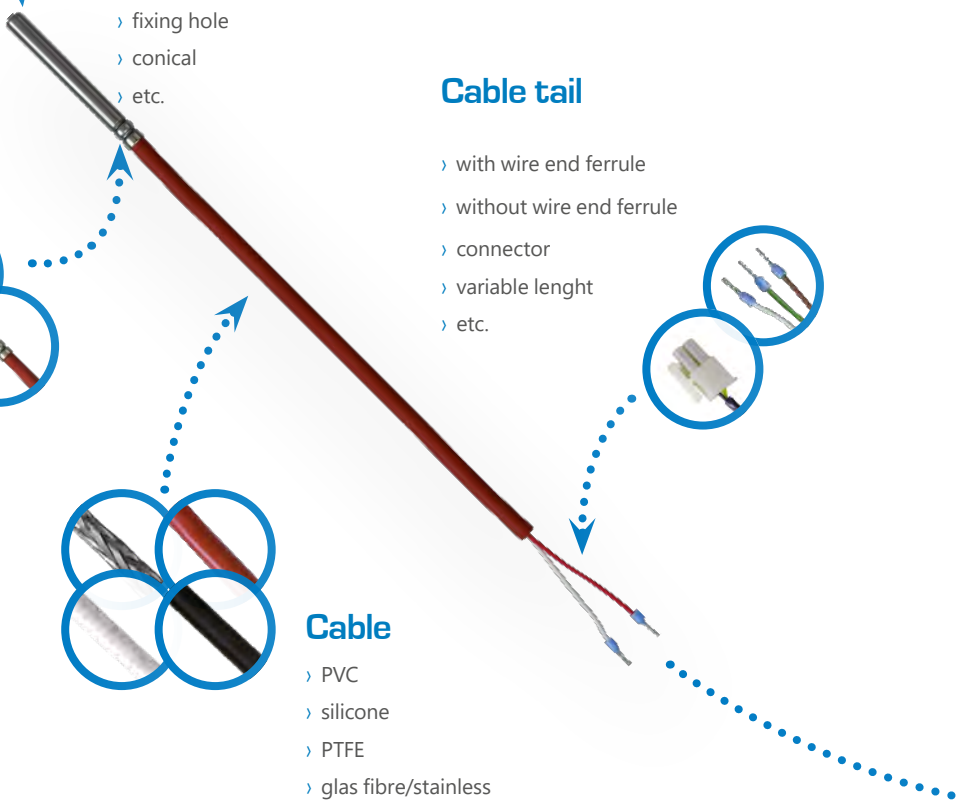

Cable tail

- with wire end ferrule
- without wire end ferrule
- connector
- variable lenght
- etc.

Coupling

- rolled
- crimped
- shrink tubing
- etc.

Cable

- PVC
- silicone
- PTFE
- glas fibre/stainless steel
- shielded
- etc.

Our Customizing-Team

Our Customizing Expert Team supports you from start to finish.

Room housing

› individual printing
› sensors
› rotary switch
› potirocker switch
› display
› LEDs
› etc.

Housing

› room housing
› industrial housing

Industrial housing

› individuelle printing
› coloured hinges
› dual PG gland
› display
› etc.

Connections

› duct sensors
› immersion sensor
› pressure
› contacting sensor
› flow
› etc.

Digital tender texts immediately in your desired format

In our download area you can easily compile the tender texts for our devices with prices and product images online and download them directly or send them by email.

You can choose from various file formats, e.g. GAEB, Datanorm, MS-Excel, ÖNorm.

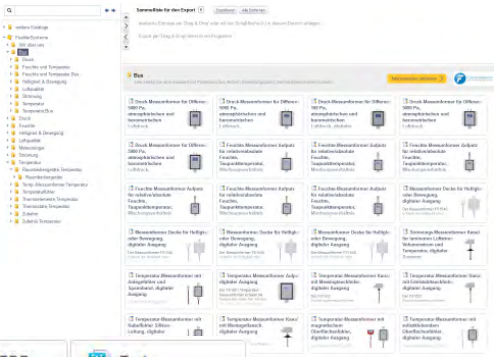

Word | Excel | RTF | PDF | Text

GAEB XML | GAEB 90 | DATANORM 5 | ÖNORM

Calibration Service

The examination of measuring instruments serves the quality assurance or is prescribed according to a quality management standard like e.g. DIN EN ISO 9001:2015.

By our calibration service the measuring instrument is examined, the deviation (measuring tolerances) defined and documented for a standard or a measurement setup.

This control of inspection, measuring and test equipment provides correct functioning of the measuring instruments in your enterprise in the context of the quality management system.

- Industrial Calibration Certificate
  fastest and inexpensive
- ISO-Certificate
  ISO 9000:2000, ISO 10012-1, GMP, CFR, VDA, QS9000, ISO TS 16949, HACCP
- DAkkS-Certificate
  calibration variant for the individual

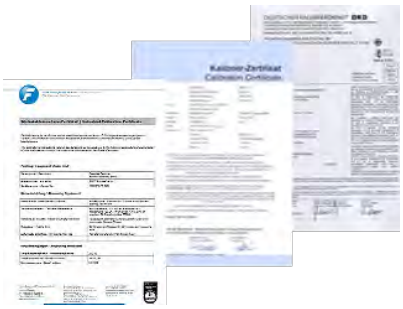

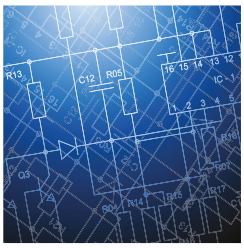

Development

- Developments Made in Germany
- ISO 9001:2015 certificated
- Own test and calibration devices
- 100% qualitiy control
- continuous new and further development

Quality Management

- Continuous improvement scheme
- 100% customer-oriented action
- Clearly defined business processes

Production

- Production located in Germany
- ISO 9001:2015 certificated
- 100% final check

Technical Support

- Trained staff
- KnowHow through years of experience
- Hotline for technical inquiries

Delivery Performance

- 24 hour delivery
- Modern stock management system
- Simplified procedures via process optimization

MADE IN GERMANY

CE

EAC

RoHS COMPLIANT

Optimized Housing

On-Wall
with hinge lock technology

- Time-saving and more convenient installation
- Robust housing with vandal protection
- Large variety of sensors
- 1,2,3-PG cable gland
- Optional large backlit LCD display
- Individual printing

- Aluminium version
- High mechanical resilience
- EMV screw
- vandal protection
- Optional large backlit LCD display
- Individual printing

MADE IN GERMANY

Room Control Units On-Wall & In-Wall

- Function-optimized
- Quick lock
- Extra wide ventilation slots
- Breaking point for cable entry
- Accurately fitting for mounting on in-Wall boxes
- thermal decoupling
- Individual printing

- Adaptation to existing switch range e.g. GIRA, Busch-Jaeger, Merten and many more.
- Socket assembly in a flush-mounted box
- Very good air circulation
- Variant Selection:
  Sensor, button, rotary switch, potentiometer, LED
- All common switch ranges
- Individual printing

On-Wall
with hinge lock technology

Innovative housing series with hinge lock technology

To meet your requirements for optimised sensors for building automation, we have designed a new range of housings. Our innovative, high-quality housing combines elegance, simplicity and function in one.

It offers a lot more space for new technologies, such as multi-function devices with several sensors for various media, a larger display with modern background lighting, a simpler device configuration via the menu in the large LCD display etc.

At least 50% saving in time
with installation using hinge lock technology

Non-losable cover
without screws

High-quality PC UL 94 V0
housing material, suitable for use outdoors

Elegant design
in high-gloss signal white RAL 9003

Compact housing
L 80 x W 89 x H 47

Advantages

• Reduction in installation costs,
• warehouse cost optimisation due to a minimisation of article variety
• a competitive advantage due to a more elegant, high-quality appearance

1, 2, 3 PG cable gland

Depending on the model, we deliver our housing with one, two or three PG cable glands.
This means that the output signals, the remote sensor, the relay, the power supply, or the Modbus series cabling can be installed even more conveniently and quickly.

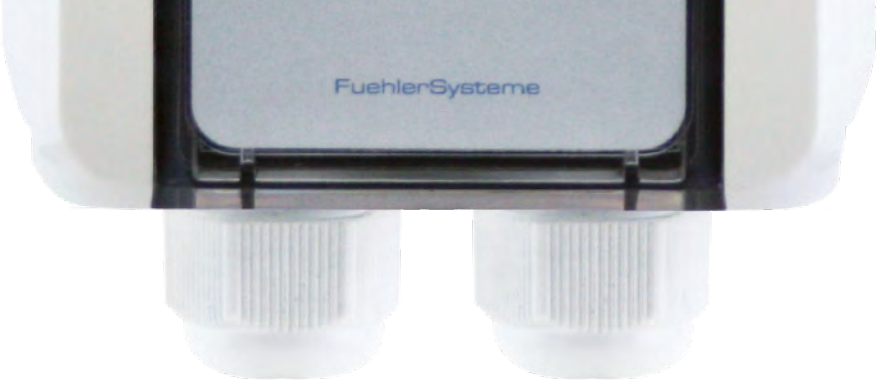

Vandal protection

With a tightly screwed cover e.g. with a Torx pin.
Vandal protection screws are covered by the hinge lock.

Large, graphic LCD display

• Separate display with 3 menu keys inside the housing cover
• with background lighting
• Includes actual values
• MIN/MAX-values
• threshold values

• 90° rotating display content

Optional Aluminium Housing

We can optionally supply our range in aluminum housings.

• High mechanical resilience
• EMC screw connection
• Vandal protection

OEM-Version

• digital printing with up to 16.7 million colors
• Freely positionable
• Different color combinations

CE

EAC

RoHS COMPLIANT

MADE IN GERMANY

Room Control Units

On-Wall & In-Wall

Optimized Room Housing

Our new form and function optimized housing is the common result of years of market experience, customer ideas and benefit analyzes. It consists of an absolutely high-quality ABS Polyman® material with excellent properties, such as high UV resistance, maximum mechanical / thermal load capacity, anti-static, etc. The housing color in the tone RAL9003 (signal white) ensures a discreet and clean appearance.

Special Features

- quick lock via clip fixing
- extra large air vents ensure optimal ventilation
- side-gated predetermined breaking point for cable entry for on-wall wiring
- accurately fitting for mounting on in-wall boxes
- thermal decoupling for a highly accurate measurement result

Adaptation to existing switch range

Our flush-mounted variants can be adapted to your existing switch range, e.g. Gira, Busch-Jaeger, Merten and many more

Variety of variants

Large selection and combinations of

- Sensors
- Button
- Rotary swith
- Potentiometer
- LEDs

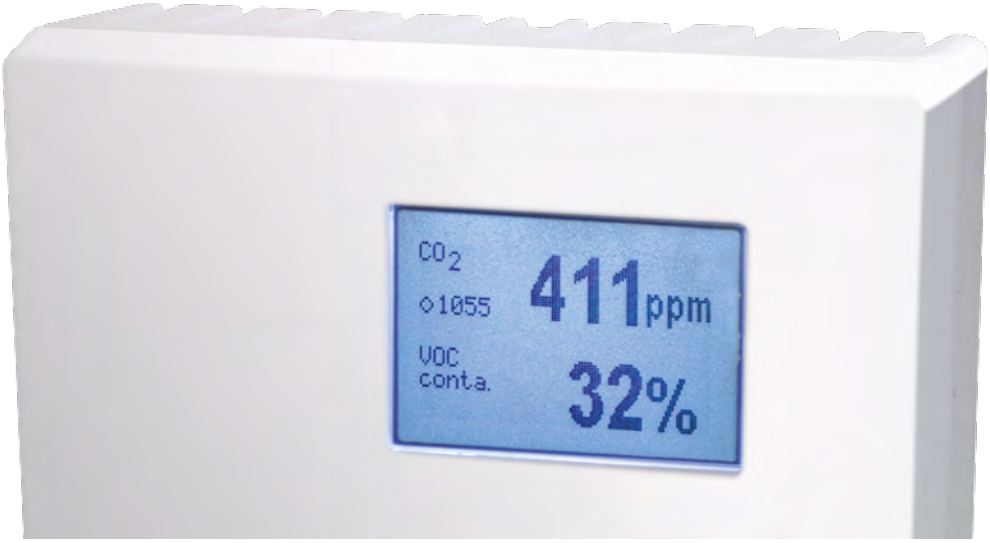

Individual printing

The labeling of the elements can be individually adapted to your needs.

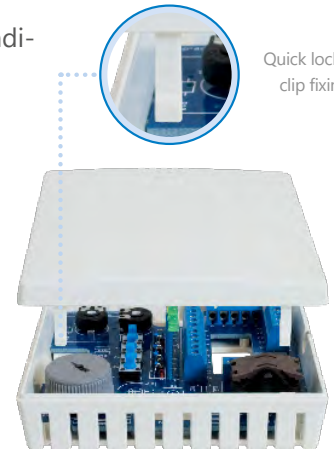

Quick lock via clip fixing

Extra wide ventilation slots

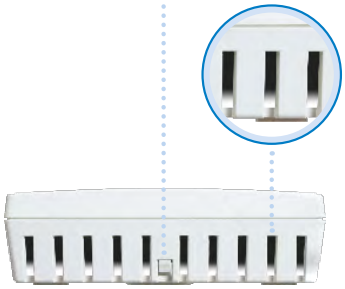

Thermal decoupling

Cable bushing

Breaking point for cable entry

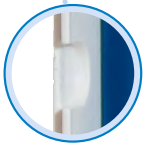

Long hole for best fit fastening

MADE IN GERMANY

CE

EAC

RoHS COMPLIANT

I/O-Devices and Gateways

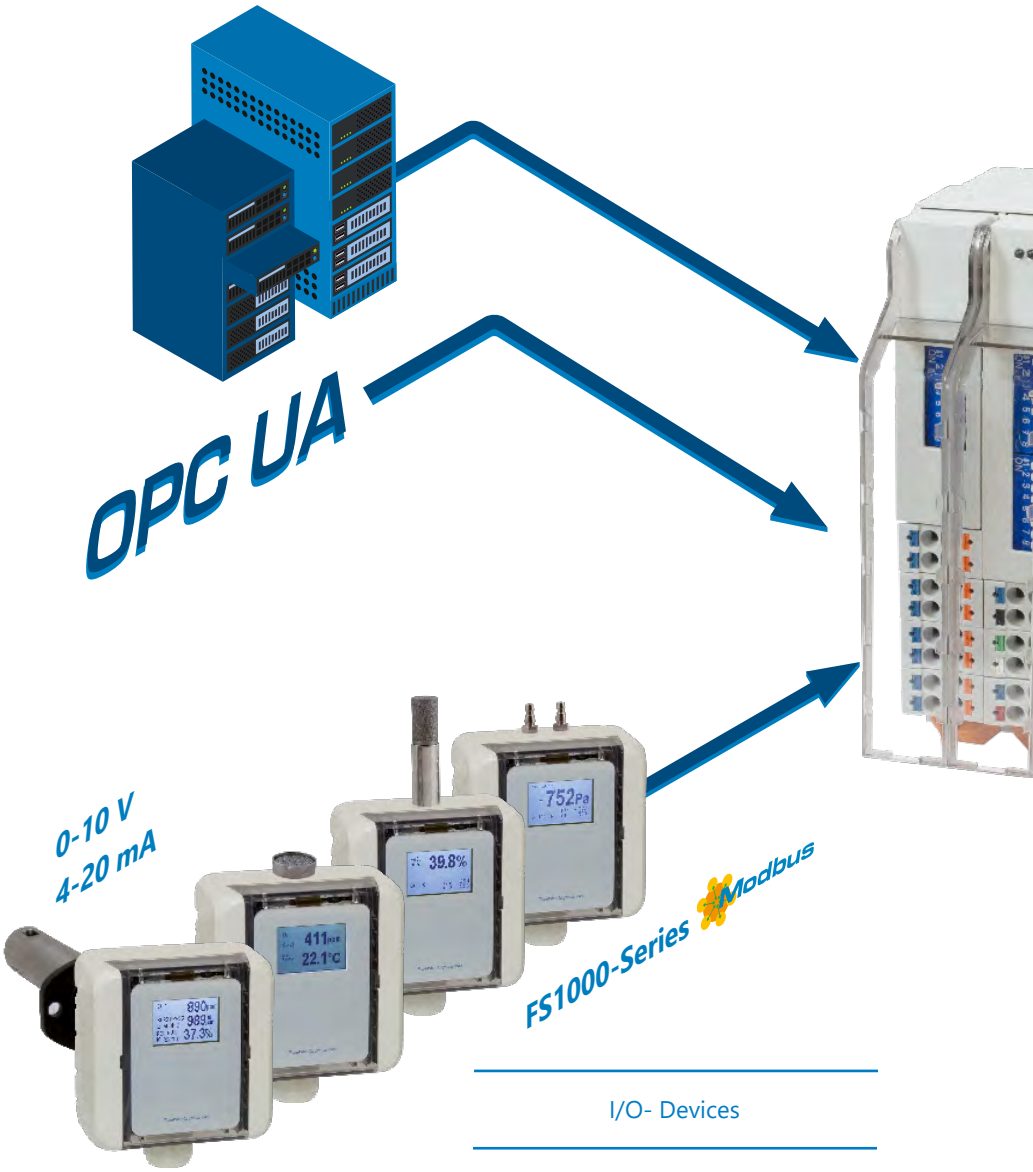

I/O- Devices

The FuehlerSysteme I/O devices convert analog measuring signals (0-10 V, 4-20 mA) into digital data. The sensor data is now available for digital business processes such as storage in a cloud. In addition, I/O devices to convert from digital to analog or relays are available as well. zur Wandlung von Digital zu Analog oder Relais erhältlich.

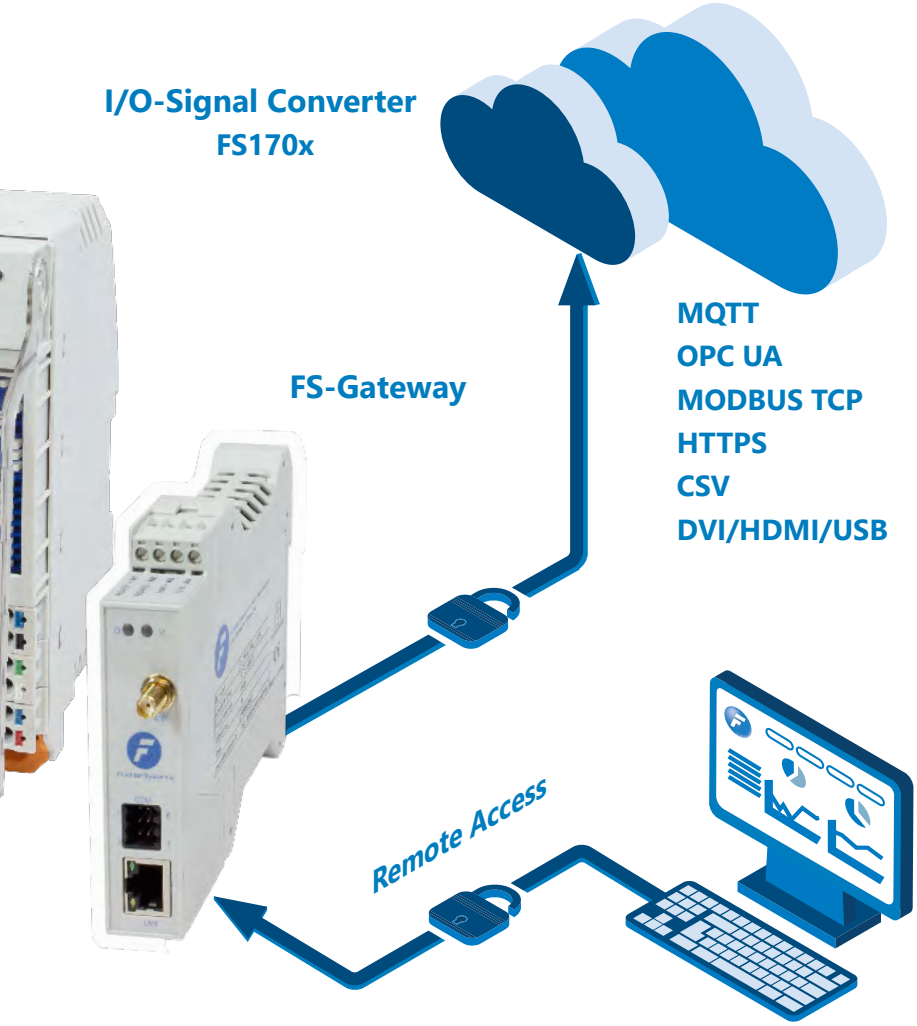

Gateways

Network, log, analyze or convert your sensor data with our gateways.

Applications
- Network your measuring devices with the Internet of Things (IOT)
- Log your measurement data locally on the gateway, on edge or in the cloud
- Perform data analysis of your measurement data using an AI stack
- Convert from a bus protocol to other standards

Features
- LAN, RS232, RS485, LTE (4G)
- Webinterface
- expandable with apps
- Micro-SD
- OPC UA, MQTT
- XML, CSV, SQL, JSON
- Modbus RTU, Modbus TCP, BACnet, Snap7
- AI Stack

Temperature Probes
passive sensor

Our temperature sensors measure the ambient temperature via a resistance sensor through which a measuring current is conducted. If the temperature changes, the conductivity (resistance) of the sensor increases or decreases.

Variety of available sensors

A large selection of platinum sensors (Pt100, Pt500, Pt1000), semiconductor sensors (NTC, PTC, KTY), and also IC sensors (LM235Z) are available as sensor elements.

High precision

For optimal measurement results, the sensors are available in various precision classes, including, for example, platinum sensors in DIN class A/B, 1/3, or 1/10 DIN, etc. High-quality sensors embedded in thermal paste ensure fast response times.

Four-wire connection

To compensate for line and connecting resistance, the temperature sensors can be made with a 3- or 4-wire connection.

Capacitors & varistors

Voltage peaks and overvoltages can be avoided by using capacitors and varistors as necessary. An additional adjustment

MADE IN GERMANY

potentiometer is available for IC sensors (LM235Z).

Formats & special formats

The temperature sensors are available with different housings, fittings, process connections, and line materials (PVC, silicone, PTFE, glass silk-stainless steel mesh, etc.) in different lengths. In addition, we can create a custom sensor format as the optimal solution for every requirement. (→page 24)

Easy assembly

Robust housings with hinge lock technology (→page 32), labelled boards, and centrally positioned wire rope clamps offer maximum freedom and speed of installation.

Best quality

With high-quality components, modern serial production, automated testing/calibration setups, and a 100% final inspection, you will be getting a product with the „Made in Germany" guarantee of quality.

Allgemeine Technische Daten	
Measurement current	approx. 1 mA
Leakage resistance	> 100 MOhm, at +20°C (500 V DC)
Approvals	CE, EAC, RoHS

LF1/E

Contacting Temperature Sensor with Silicone Cable and Clamping Band

Measurand: temperature
Output: passive sensor
Highlights: contacting block aluminium, incl. clamping band

Dimensional Drawing: p.322 #001 | Connection Drawing: p.294 #001 | Price Table: pp.433

Measurement range temp.	-50...+180°C
Sensor	Pt100, Pt500, Pt1000, Ni1000, KTY, NTC, LM235Z (other on request)
Circuit type	2-wire connection
Electrical connection	stripped ends with ferrules
Cable	silicone cable (2x0,22 mm², max. +180°C) with core cable ends
Material	Contacting block: aluminium
Protection type	IP65
Working temperature	-50...+180°C
Storage temperature	-20...+70°C

General Technical Data p.39

LF2/E

Contacting Temperature Sensor with Clamping Band

Measurand: temperature
Output: passive sensor
Highlights: contacting block aluminium,incl. clamping band, 2-wire connection

Dimensional Drawing: p.322 #002 | Connection Drawing: p.294 #001 | Price Table: p.434

Measurement range temp.	-30...+110°C
Sensor	Pt100, Pt500, Pt1000, Ni1000, KTY, NTC, LM235Z (other on request)
Circuit type	2-wire connection
Electrical connection	screw terminals max. 1,5 mm²
Cable gland	PG11 high-strength cable gland with strain relief
Material	Contacting block: aluminium
Protection type	IP65
Working temperature	-30...+110°C
Storage temperature	-20...+70°C

General Technical Data p.39

AF1/E

Outdoor temperature sensor

Measurand: temperature
Output: passive sensor
Highlights: large sensor selection, easy installation, 2-wire connection

Dimensional Drawing: p.322 #003 | Connection Drawing: p.294 #001 | Price Table: p.376

Measurement range temp.	-50...+90°C
Sensor	Pt100, Pt500, Pt1000, Ni1000, KTY, NTC, LM235Z (other on request)
Circuit type	2-wire connection
Electrical connection	screw terminals max. 1,5 mm²
Cable gland	PG11 high-strength cable gland with strain relief
Protection type	IP65
Working temperature	-50...+90°C
Storage temperature	-20...+70°C

General Technical Data p.39

AF2/E

Outdoor temperature sensor with sleeve

Measurand: temperature
Output: passive sensor
Highlights: ext. protection sleeve with sensor for better measuring

Dimensional Drawing: p.323 #004 | Connection Drawing: p.294 #001 | Price Table: p.377

Measurement range temp.	-50...+90°C
Sensor	Pt100, Pt500, Pt1000, Ni1000, KTY, NTC, LM235Z (other on request)
Circuit type	2-wire connection
Electrical connection	screw terminals max. 1,5 mm²
Cable gland	PG11 high-strength cable gland with strain relief
Material	Protection sleeve: stainless steel VA 1.4571
Protection type	IP65
Working temperature	-50...+90°C
Storage temperature	-20...+70°C

General Technical Data p.39

BF1/E

Bayonet temperature probe with 120° measuring peak

Measurand: temperature
Output: passive sensor
Highlights: 120° measuring peak, Bayonet cap: Ø 12 or 14 mm

Dimensional Drawing: p.323 #005 | Connection Drawing: p.294 #001 | Price Table: p.379

Measurement range temp.	-30...+350°C
Sensor	Pt100, Pt500, Pt1000 (other on request)
Circuit type	2-wire connection
Cable	2 m up to 5 m glass fibre/stainless steel netting (2x0,22 mm², max. +400°C) with core cable ends
Material	Stainless steel VA 1.4571
Protection type	IP54
Storage temperature	-20...+70°C

General Technical Data p.39

BF2/E

Bayonet temperature probe with plane measuring peak

Measurand: temperature
Output: passive sensor
Highlights: plane measuring peak, bayonet cap: Ø 12 or 14 mm

Dimensional Drawing: p.323 #006 | Connection Drawing: p.294 #001 | Price Table: p.380

Measurement range temp.	-30...+350°C
Sensor	Pt100, Pt500, Pt1000 (other on request)
Circuit type	2-wire connection
Cable	2 m up to 5 m glass fibre/stainless steel netting (2x0,22 mm², max. +400°C) with core cable ends
Material	Stainless steel VA 1.4571
Protection type	IP54
Storage temperature	-20...+70°C

General Technical Data p.39

EF1/E

Screw-in temperature sensor with brass immersion sleeve

Measurand: temperature
Output: passive sensor
Highlights: Pmax 16 bar, immersion sleeve with thread R1/2 inch

Dimensional Drawing: p.324 #007 | Connection Drawing: p.294 #001 | Price Table: p.394

Measurement range temp.	-30...+150°C
Sensor	Pt100, Pt500, Pt1000, Ni1000, KTY, NTC, LM235Z (other on request)
Circuit type	2-wire connection
Electrical connection	screw terminals max. 1,5 mm²
Cable gland	PG11 high-strength cable gland with strain relief
Material	Protection sleeve: stainless steel VA 1.4571, Immersion sleeve: brass nickel-plated, Pmax. 16 bar
Protection type	IP65
Storage temperature	-20...+70°C

General Technical Data p.39

EF2/E

Screw-in temperature sensor with stainless steel immersion sleeve

Measurand: temperature
Output: passive sensor
Highlights: Pmax 40 bar, immersion sleeve with thread G1/2 inch

Dimensional Drawing: p.324 #008 | Connection Drawing: p.294 #001 | Price Table: p.394

Measurement range temp.	-30...+150°C
Sensor	Pt100, Pt500, Pt1000, Ni1000, KTY, NTC, LM235Z (other on request)
Circuit type	2-wire connection
Electrical connection	screw terminals max. 1,5 mm²
Cable gland	PG11 high-strength cable gland with strain relief
Material	Protection sleeve: stainless steel VA 1.4571, Immersion sleeve: stainless steel VA 1.4404, Pmax. 40 bar
Protection type	IP65
Storage temperature	-20...+70°C

General Technical Data p.39

EF3/E

Screw-in temperature sensor with terminal head form B

Measurand: temperature
Output: passive sensor
Highlights: Pmax 40 bar, thread G1/2 inch

Dimensional Drawing: p.324 #009 | Connection Drawing: p.294 #001 | Price Table: p.395

Measurement range temp.	-30...+180°C
Sensor	Pt100, Pt500, Pt1000, Ni1000, KTY, NTC, LM235Z (other on request)
Circuit type	2-wire connection
Electrical connection	screw terminals max. 2,5 mm²
Cable gland	M20x1,5 cable gland with strain relief
Material	Protection sleeve: stainless steel VA 1.4571, Immersion sleeve: stainless steel VA 1.4571, Pmax. 40 bar
Protection type	IP54
Storage temperature	-20...+70°C

General Technical Data p.39

EF4/E

Screw-in temperature sensor with terminal head form B and neck tube

Measurand: temperature
Output: passive sensor
Highlights: thread G1/2 inch, neck tube for heat dissipation, replaceable sensor unit

Dimensional Drawing: p.325 #010 | Connection Drawing: p.294 #001 | Price Table: p.395

Measurement range temp.	-30...+180°C, -30...+600°C (H-variant)
Sensor	Pt100, Pt500, Pt1000 (other on request)
Circuit type	2-wire connection
Electrical connection	screw terminals max. 2,5 mm²
Cable gland	M20x1,5 cable gland with strain relief
Material	Protection sleeve: stainless steel VA 1.4571
Protection type	IP65
Storage temperature	-20...+70°C

General Technical Data p.39

EF5/E

Screw-in temperature sensor with silicone cable

Measurand: temperature
Output: passive sensor
Highlights: Pmax 40 bar, thread G1/2 inch

Dimensional Drawing: p.325 #011 | Connection Drawing: p.294 #001 | Price Table: p.395

Measurement range temp.	-50...+180°C
Sensor	Pt100, Pt500, Pt1000, Ni1000, KTY, NTC, LM235Z (other on request)
Circuit type	2-wire connection
Electrical connection	stripped ends with ferrules
Cable	silicone cable (2x0,22 mm², max. +180°C) with core cable ends
Material	Protection sleeve: stainless steel VA 1.4571, max. pressure 40 bar
Protection type	IP65
Storage temperature	-20...+70°C

General Technical Data p.39

EF6/E

Screw-in temperature sensor with terminal head form J

Measurand: temperature
Output: passive sensor
Highlights: Pmax 40 bar, thread G1/2 inch

Dimensional Drawing: p.325 #012 | Connection Drawing: p.294 #001 | Price Table: p.396

Measurement range temp.	-30...+180°C, -70...+550°C (H-variant)
Sensor	Pt100, Pt1000 (other on request)
Circuit type	2-wire connection
Electrical connection	screw terminals max. 2,5 mm²
Cable gland	M16x1,5 high-strength cable gland with strain relief
Material	Protection sleeve: stainless steel VA 1.4571, max. pressure 40 bar
Protection type	IP65
Storage temperature	-20...+70°C

General Technical Data p.39

EF7/E

Screw-in temperature sensor with plug connector DIN EN 175301

Measurand: temperature
Output: passive sensor
Highlights: Pmax 40 bar, thread G1/2 inch

Dimensional Drawing: p.326 #013 | Connection Drawing: p.294 #002 | Price Table: p.396

Measurement range temp.	-30...+180°C
Sensor	Pt100, Pt1000 (other on request)
Circuit type	2-wire connection
Electrical connection	angular connector according to DIN EN 175301-803 C
Cable gland	M16x1,5 high-strength cable gland with strain relief
Material	Protection sleeve: stainless steel VA 1.4571, max. pressure 40 bar
Protection type	IP65
Storage temperature	-20...+70°C

General Technical Data p.39

EF8/E

Screw-in temperature sensor with M12 plug connector

Measurand: temperature
Output: passive sensor
Highlights: Pmax40 bar, fast-closing M12

Dimensional Drawing: p.326 #014 | Connection Drawing: p.294 #003 | Price Table: p.396

Measurement range temp.	-30...+90°C
Sensor	Pt100, Pt1000 (other on request)
Circuit type	4-wire connection
Electrical connection	M12 plug connector
Material	Protection sleeve: stainless steel VA 1.4571, max. pressure 40 bar
Protection type	IP65
Storage temperature	-20...+70°C

General Technical Data p.39

HE/E

Hand infeed temperature probe with PTFE-hand grip and silicone-cable

Measurand: temperature
Output: passive sensor
Highlights: PTFE hand grip, water-vapour-proof casted, bend protection: stainless steel

Dimensional Drawing: p.326 #015 | Connection Drawing: p.294 #001 | Price Table: p.426

Measurement range temp.	-50...+200°C
Sensor	Pt100, Pt500, Pt1000 (other on request)
Circuit type	2-wire connection
Cable	4 m silicone cable (2x0,22 mm², max. +180°C) with core cable ends
Material	Probe: stainless steel VA 1.4571, Hand grip: PTFE, Bend protection: stainless steel
Protection type	IP65, water-vapour-proof cast
Storage temperature	-20...+70°C

General Technical Data p.39

HET/E

Hand infeed temperature probe with PTFE-hand grip and PTFE-cable

Measurand: temperature
Output: passive sensor
Highlights: PTFE hand grip, water-vapour-proof casted, bend protection: stainless steel

Dimensional Drawing: p.327 #016 | Connection Drawing: p.294 #001 | Price Table: p.426

Measurement range temp.	-50...+250°C
Sensor	Pt100, Pt500, Pt1000 (other on request)
Circuit type	2-wire connection
Cable	4 m PTFE cable (2x0,22 mm², max. +260°C) with core cable ends
Material	Probe: stainless steel VA 1.4571, Hand grip: PTFE, Bend protection: stainless steel
Protection type	IP65, water-vapour-proof cast
Storage temperature	-20...+70°C

General Technical Data p.39

KP/E

Cable temperature sensor with PVC cable

Measurand: temperature
Output: passive sensor
Highlights: moisture sealed rolled, Protection sleeve: stainless steel, with core cable ends

Dimensional Drawing: p.327 #017 | Connection Drawing: p.294 #001 | Price Table: p.430

Measurement range temp.	-35...+105°C
Sensor	Pt100, Pt500, Pt1000, Ni1000, KTY, NTC, LM235Z (other on request)
Circuit type	2-wire connection
Cable	2 m up to 5 m PVC cable (2x0,25 mm², max. +105°C) with core cable ends
Material	Protection sleeve: stainless steel VA 1.4571
Protection type	IP67 (moisture sealed rolled)
Storage temperature	-20...+70°C

General Technical Data p.39

KS/E

Cable Temperature Sensor with Silicone Cable

Measurand: temperature
Output: passive sensor
Highlights: moisture sealed rolled, Protection sleeve: stainless steel, with core cable ends

Dimensional Drawing: p.327 #018 | Connection Drawing: p.294 #001 | Price Table: p.430

Measurement range temp.	-50...+180°C
Sensor	Pt100, Pt500, Pt1000, Ni1000, KTY, NTC, LM235Z (other on request)
Circuit type	2-wire connection
Cable	2 m up to 5 m silicone cable (2x0,22 mm², max. +180°C) with core cable ends
Material	Protection sleeve: stainless steel VA 1.4571
Protection type	IP67 (moisture sealed rolled)
Storage temperature	-20...+70°C

General Technical Data p.39

KSt/E

Cable Temperature Sensor with Glass Fibre/ Stainless Steel Netting

Measurand: temperature
Output: passive sensor
Highlights: Protection sleeve: stainless steel, with core cable ends

Dimensional Drawing: p.328 #019 | Connection Drawing: p.294 #001 | Price Table: p.432

Measurement range temp.	-50...+400°C
Sensor	Pt100, Pt1000 and Ni1000
Circuit type	2-wire connection
Cable	2 m up to 5 m glass fibre/stainless steel netting (2x0,22 mm², max. +400°C) with core cable ends
Material	Protection sleeve: stainless steel VA 1.4571
Protection type	IP54
Storage temperature	-20...+70°C

General Technical Data p.39

KT/E

Cable Temperature Sensor with PTFE Cable

Measurand: temperature
Output: passive sensor
Highlights: moisture sealed rolled, Protection sleeve: stainless steel, with core cable ends

Dimensional Drawing: p.328 #020 | Connection Drawing: p.294 #001 | Price Table: p.432

Measurement range temp.	-70...+250°C
Sensor	Pt100, Pt500, Pt1000 (other on request)
Circuit type	2-wire connection
Cable	2 m up to 5 m PTFE cable (2x0,22 mm², max. +260°C) with core cable ends
Material	Protection sleeve: stainless steel VA 1.4571
Protection type	IP67 (moisture sealed rolled)
Storage temperature	-20...+70°C

General Technical Data p.39

LP/E

Temperature Sensor with Perforated Protection Sleeve and PVC Cable

Measurand: temperature
Output: passive sensor
Highlights: perforated protection sleeve, with core cable ends, protection sleeve stainless steel

Dimensional Drawing: p.328 #021 | Connection Drawing: p.294 #001 | Price Table: p.436

Measurement range temp.	-35...+105°C
Sensor	Pt100, Pt500, Pt1000, Ni1000, KTY, NTC, LM235Z (other on request)
Circuit type	2-wire connection
Cable	2 m up to 5 m PVC cable (2x0,25 mm², max. +105°C) with core cable ends
Material	Protection sleeve: stainless steel VA 1.4571
Protection type	IP20
Storage temperature	-20...+70°C

General Technical Data p.39

KF1/E

Duct temperature sensor with mounting flange

Measurand: temperature
Output: passive sensor
Highlights: easy to install with included mounting flange

Dimensional Drawing: p.329 #022 | Connection Drawing: p.294 #001 | Price Table: p.428

Measurement range temp.	-30...+150°C
Sensor	Pt100, Pt500, Pt1000, Ni1000, KTY, NTC, LM235Z (other on request)
Circuit type	2-wire connection
Electrical connection	screw terminals max. 1,5 mm²
Cable gland	PG11 high-strength cable gland with strain relief
Material	Protection sleeve: stainless steel VA 1.4571
Protection type	IP65
Storage temperature	-20...+70°C

General Technical Data p.39

KF2/E

Duct temperature sensor with terminal head form J

Measurand: temperature
Output: passive sensor
Highlights: easy to install with included mounting flange

Dimensional Drawing: p.329 #023 | Connection Drawing: p.294 #001 | Price Table: p.428

Measurement range temp.	-30...+150°C
Sensor	Pt100, Pt500, Pt1000, Ni1000, KTY, NTC, LM235Z (other on request)
Circuit type	2-wire connection
Electrical connection	screw terminals max. 2,5 mm²
Cable gland	M16x1,5 high-strength cable gland with strain relief
Material	Protection sleeve: stainless steel VA 1.4571, Mounting flange: aluminium
Protection type	IP65
Storage temperature	-20...+70°C

General Technical Data p.39

KF3/E

Duct temperature sensor with terminal head form B

Measurand: temperature
Output: passive sensor
Highlights: easy to install with included mounting flange

Dimensional Drawing: p.329 #024 | Connection Drawing: p.294 #001 | Price Table: p.428

Measurement range temp.	-30...+180°C, -30...+600°C (H-variant)
Sensor	Pt100, Pt500, Pt1000 (other on request)
Circuit type	2-wire connection
Electrical connection	screw terminals max. 2,5 mm²
Cable gland	M20x1,5 cable gland with strain relief
Material	Protection sleeve: stainless steel VA 1.4571, Mounting flange: aluminium
Protection type	IP54
Storage temperature	-20...+70°C

General Technical Data p.39

MWT/E

Mantle Resistance Thermometer

Measurand: temperature
Output: passive sensor
Highlights: bendable mantle probe, installation length 100 up to 400 mm, short response time

Dimensional Drawing: p.330 #025 | Connection Drawing: p.294 #001 | Price Table: p.443

Measurement range temp.	-70...+500°C
Sensor	Pt100, Pt1000 (other on request)
Circuit type	2-wire connection
Cable	2 m glass fibre/stainless steel netting (2x0,22 mm², max. +400°C) with core cable ends
Material	Probe: stainless steel VA 1.4541
Protection type	IP54
Storage temperature	-20...+70°C

General Technical Data p.39

MF/E

Average Temperature Value Sensor

Measurand: temperature
Output: passive sensor
Highlights: tightened rod with copper core, easy to install with included mounting flange and mounting clamps

Dimensional Drawing: p.330 #026 | Connection Drawing: p.294 #001 | Price Table: p.436

Measurement range temp.	-30...+80°C
Sensor	Pt100, Pt1000 and Ni1000
Circuit type	2-wire connection
Electrical connection	screw terminals max. 1,5 mm²
Cable gland	PG11 high-strength cable gland with strain relief
Material	Rod: copper (oxidation protective coating, black)
Protection type	IP65
Working temperature	-30...+80°C
Storage temperature	-20...+70°C

General Technical Data p.39

OF1/E

Surface Temperature Sensor - Self-adhesive

Measurand: temperature
Output: passive sensor
Highlights: aluminium contacting block, incl. self-adhesive cap

Dimensional Drawing: p.330 #027 | Connection Drawing: p.294 #001 | Price Table: p.444

Measurement range temp.	-30...+80°C
Sensor	Pt100, Pt500, Pt1000, Ni1000, KTY, NTC, LM235Z (other on request)
Circuit type	2-wire connection
Cable	2 m up to 5 m PVC cable (2x0,14 mm², max. +105°C) with core cable ends
Material	Contacting block: aluminium
Protection type	IP65
Storage temperature	-20...+70°C

General Technical Data p.39

OF2/E

Surface Temperature Sensor - Stainless Steel Block with PVC Cable

Measurand: temperature
Output: passive sensor
Highlights: stainless steel contacting block, bore hole Ø 5 mm

Dimensional Drawing: p.331 #028 | Connection Drawing: p.294 #001 | Price Table: p.444

Measurement range temp.	-35...+105°C
Sensor	Pt100, Pt500, Pt1000, Ni1000, KTY, NTC, LM235Z (other on request)
Circuit type	2-wire connection
Cable	2 m up to 5 m PVC cable (2x0,25 mm², max. +105°C) with core cable ends
Material	Contacting block: stainless steel VA 1.4571
Protection type	IP54
Storage temperature	-20...+70°C

General Technical Data p.39

OF3/E

Surface Temperature Sensor - Stainless Steel Block with Glass Fibre/Stainless Steel Netting

Measurand: temperature
Output: passive sensor
Highlights: stainless steel contacting block, bore hole Ø 5 mm

Dimensional Drawing: p.331 #029 | Connection Drawing: p.294 #001 | Price Table: p.445

Measurement range temp.	-30...+400°C
Sensor	Pt100, Pt500, Pt1000 (other on request)
Circuit type	2-wire connection
Cable	2 m up to 5 m glass fibre/stainless steel netting (2x0,22 mm², max. +400°C) with core cable ends
Material	Contacting block: stainless steel VA 1.4571
Protection type	IP54
Storage temperature	-20...+70°C

General Technical Data p.39

OF4/E

Surface Temperature Sensor - Magnetic

Measurand: temperature
Output: passive sensor
Highlights: magnetic adhesive force 90 N

Dimensional Drawing: p.331 #030 | Connection Drawing: p.294 #001 | Price Table: p.445

Measurement range temp.	-40...+400°C
Sensor	Pt100, Pt500, Pt1000 (other on request)
Circuit type	2-wire connection
Cable	2 m up to 5 m silicone cable (2x0,22 mm², max. +180°C) with core cable ends
Protection type	IP54
Storage temperature	-20...+70°C

General Technical Data p.39

OF5/E

Surface Temperature Sensor - Stainless Steel Block with Glass Fibre/Stainless Steel Netting

Measurand: temperature
Output: passive sensor
Highlights: three holding magnets, bore hole Ø 5 mm

Dimensional Drawing: p.331 #029 | Connection Drawing: p.294 #001 | Price Table: p.445

Measurement range temp.	-30...+500°C
Sensor	Pt100, Pt500, Pt1000 (other on request)
Circuit type	2-wire connection
Cable	2 m up to 5 m glass fibre/stainless steel netting (2x0,22 mm², max. +400°C) with core cable ends
Material	Contacting block: stainless steel VA 1.4571
Protection type	IP54
Storage temperature	-20...+70°C

General Technical Data p.39

OF6/E

Surface Temperature Sensor - Magnetic with silicone cable

Measurand: temperature
Output: passive sensor
Highlights: three holding magnets - holding force 45N

Dimensional Drawing: p.332 #031 | Connection Drawing: p.294 #001 | Price Table: p.446

Measurement range temp.	-30...+180°C
Sensor	Pt100, Pt500, Pt1000, Ni1000, NTC, LM235Z (other on request)
Circuit type	2-wire connection
Cable	2 m up to 5 m silicone cable (2x0,22 mm², max. +180°C) with core cable ends
Protection type	IP54
Storage temperature	-20...+70°C

General Technical Data p.39

OF7/E

Surface Temperature Sensor - Magnetic with Glass Fibre/Stainless Steel Netting

Measurand: temperature
Output: passive sensor
Highlights: three holding magnets - holding force 45N

Dimensional Drawing: p.332 #032 | Connection Drawing: p.294 #001 | Price Table: p.446

Measurement range temp.	-30...+400°C
Sensor	Pt100, Pt500, Pt1000, Ni1000, NTC, LM235Z (other on request)
Circuit type	2-wire connection
Cable	2 m up to 5 m glass fibre/stainless steel netting (2x0,22 mm², max. +400°C) with core cable ends
Protection type	IP54
Storage temperature	-20...+70°C

General Technical Data p.39

TPF2/E

Pendulum Temperature Sensor with Stainless Steel Sleeve

Measurand: temperature
Output: passive sensor
Highlights: stainless steel pendulum

Dimensional Drawing: p.332 #033 | Connection Drawing: p.294 #001 | Price Table: p.468

Measurement range temp.	-35...+105°C
Sensor	Pt100, Pt500, Pt1000, Ni1000, KTY, NTC, LM235Z (other on request)
Circuit type	2-wire connection
Electrical connection	stripped ends with ferrules
Cable	2 m up to 5 m PVC cable (2x0,25 mm², max. +105°C) with core cable ends
Material	Protection sleeve: stainless steel VA 1.4571
Protection type	IP65
Storage temperature	-20...+70°C

General Technical Data p.39

RF/E

Room Temperature Sensor

Measurand: temperature
Output: passive sensor
Highlights: modern housing design, mounting on-wall or on junction box

Dimensional Drawing: p.333 #034 | Connection Drawing: p.294 #001 | Price Table: p.451

Measurement range temp.	-30...+60°C
Sensor	Pt100, Pt500, Pt1000, Ni1000, KTY, NTC, LM235Z (other on request)
Circuit type	2-wire connection
Electrical connection	screw terminals max. 1,5 mm²
Cable gland	on the back or housing side (predetermined breaking point)
Protection type	IP30
Protection class	III
Storage temperature	-20...+50°C

General Technical Data p.39

UP1/E

In-Wall Room Temperature Sensor

Measurand: temperature
Output: passive sensor
Highlights: GIRA standard 55

Dimensional Drawing: p.333 #035 | Connection Drawing: p.294 #001 | Price Table: p.471

Measurement range temp.	-30...+60°C
Sensor	Pt100, Pt500, Pt1000, Ni1000, KTY, NTC, LM235Z (other on request)
Circuit type	2-wire connection
Electrical connection	screw terminals max. 1,5 mm²
Light switch program	GIRA Standard 55, pure white satin (other on request)
Protection type	IP20
Protection class	III
Storage temperature	-20...+50°C

General Technical Data p.39

DF/E

Ceiling temperature sensor

Measurand: temperature
Output: passive sensor
Highlights: modern housing design, mounting in a suspended ceiling or plasterboard wall

Dimensional Drawing: p.333 #036 | Connection Drawing: p.294 #001 | Price Table: p.391

Measurement range temp.	-30...+60°C
Sensor	Pt100, Pt500, Pt1000, Ni1000, KTY, NTC, LM235Z (other on request)
Circuit type	2-wire connection
Electrical connection	stripped ends with ferrules
Cable	125 mm silicone cable (2x0,75 mm², max. +180°C)
Protection type	IP30
Protection class	III
Storage temperature	-20...+50°C

General Technical Data p.39

ASF/E

Radiation temperature sensor - outdoor

Measurand: temperature
Output: passive sensor
Highlights: aluminium globe, measuring of the thermal radiation

Dimensional Drawing: p.334 #037 | Connection Drawing: p.294 #001 | Price Table: p.378

Measurement range temp.	-30...+75°C
Sensor	Pt100, Pt500, Pt1000, Ni1000, KTY, NTC, LM235Z (other on request)
Circuit type	2-wire connection
Electrical connection	screw terminals max. 1,5 mm²
Cable gland	PG11 high-strength cable gland with strain relief
Material	Globe: aluminium (black)
Protection type	IP65
Storage temperature	-20...+70°C

General Technical Data p.39

RSF/E

Radiation Temperature Sensor - Room

Measurand: temperature
Output: passive sensor
Highlights: aluminium globe, modern housing design

Dimensional Drawing: p.334 #038 | Connection Drawing: p.294 #001 | Price Table: p.462

Measurement range temp.	-30...+75°C
Sensor	Pt100, Pt500, Pt1000, Ni1000, KTY, NTC, LM235Z (other on request)
Circuit type	2-wire connection
Electrical connection	screw terminals max. 1,5 mm²
Cable gland	on the back or housing side (predetermined breaking point)
Material	Globe: aluminium (black)
Protection type	IP30
Storage temperature	-20...+50°C

General Technical Data p.39

TPF1/E

Radiation Pendulum Temperature Sensor

Measurand: temperature
Output: passive sensor
Highlights: aluminium globe

Dimensional Drawing: p.334 #039 | Connection Drawing: p.294 #001 | Price Table: p.468

Measurement range temp.	-30...+75°C
Sensor	Pt100, Pt500, Pt1000, Ni1000, KTY, NTC, LM235Z (other on request)
Circuit type	2-wire connection
Electrical connection	stripped ends with ferrules
Cable	2 m up to 5 m PVC cable (2x0,25 mm², max. +105°C) with core cable ends
Material	Globe: aluminium (black)
Protection type	IP54
Storage temperature	-20...+70°C

General Technical Data p.39

TF1/E

Immersion Temperature Sensor with Housing

Measurand: temperature
Output: passive sensor
Highlights: quick an easy mounting

Dimensional Drawing: p.335 #040 | Connection Drawing: p.294 #001 | Price Table: p.465

Measurement range temp.	-30...+150°C
Sensor	Pt100, Pt500, Pt1000, Ni1000, KTY, NTC, LM235Z (other on request)
Circuit type	2-wire connection
Electrical connection	screw terminals max. 1,5 mm²
Cable gland	PG11 high-strength cable gland with strain relief
Material	Protection sleeve: stainless steel VA 1.4571
Protection type	IP65
Storage temperature	-20...+70°C

General Technical Data p.39

TF4/E

Immersion Temperature Sensor with Housing and Flexible Silicone Cable

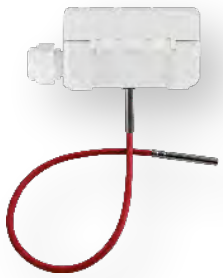

Measurand: temperature
Output: passive sensor
Highlights: installation length 100-400 mm

Dimensional Drawing: p.335 #041 | Connection Drawing: p.294 #001 | Price Table: p.466

Measurement range temp.	-50...+180°C
Sensor	Pt100, Pt500, Pt1000, Ni1000, KTY, NTC, LM235Z (other on request)
Circuit type	2-wire connection
Electrical connection	screw terminals max. 1,5 mm²
Cable	0,3 m silicone cable (max +180°C)
Cable gland	PG11 high-strength cable gland with strain relief
Material	Protection sleeve: stainless steel VA 1.4571
Protection type	IP65 (housing), IP67 (sensor)
Storage temperature	-20...+70°C

General Technical Data p.39

TF5/E

Immersion Temperature Sensor with Silicone Cable

Measurand: temperature
Output: passive sensor
Highlights: moisture sealed rolled, Protection sleeve stainless steel

Dimensional Drawing: p.335 #042 | Connection Drawing: p.294 #001 | Price Table: p.466

Measurement range temp.	-50...+180°C
Sensor	Pt100, Pt1000 (other on request)
Circuit type	2-, 3- or 4-wire connection
Electrical connection	stripped ends with ferrules
Cable	silicone cable (max. +180°C) with core cable ends
Material	Protection sleeve: stainless steel VA 1.4571
Protection type	IP67 (moisture sealed rolled)
Storage temperature	-20...+70°C

General Technical Data p.39

TF7/E

Immersion Temperature Sensor with Plug Connector DIN EN 175301

Measurand: temperature
Output: passive sensor
Highlights: angular connector according to DIN EN 175301-803 C

Dimensional Drawing: p.336 #043 | Connection Drawing: p.294 #002 | Price Table: p.466

Measurement range temp.	-30...+180°C
Sensor	Pt100, Pt1000 (other on request)
Circuit type	2-wire connection
Electrical connection	angular connector according to DIN EN 175301-803 C
Cable gland	M16x1,5 high-strength cable gland with strain relief
Material	Protection sleeve: stainless steel VA 1.4571
Protection type	IP65
Storage temperature	-20...+70°C

General Technical Data p.39

TF8/E

Immersion Temperature Sensor with M12 Plug Connector

Measurand: temperature
Output: passive sensor
Highlights: Protection sleeve: Ø 6 mm, stainless steel

Dimensional Drawing: p.336 #044 | Connection Drawing: p.294 #003 | Price Table: p.467

Measurement range temp.	-30...+90°C
Sensor	Pt100, Pt1000 (other on request)
Circuit type	4-wire connection
Electrical connection	M12 plug connector
Material	Protection sleeve: stainless steel VA 1.4571
Protection type	IP65
Storage temperature	-20...+70°C

General Technical Data p.39

Temperature Transducers

Our temperature transducers record the ambient temperature via a Pt100 resistance sensor and convert the measured value into an analogue 0-10 V or 4-20 mA output signal.

Changeover contact

The measuring devices can be expanded with a potential-free changeover contact, the switching threshold of which is determined via a potentiometer.

DIP switch technology

Different scaling and switching types (2/3/4 wire) can be configured using the DIP switch on the device board.
Offset potentiometer

A manual fine calibration of the temperature is possible during ongoing operation with an offset potentiometer. The characteristic curve is shifted to the original one.

Display

The optional backlit LCD display is used to display actual values, min/max values, switching thresholds, relay states, and can be rotated every 90° using the menu. (→page 33)

Device settings

The min/max interval, the relay switching hysteresis, various display options (brightness, contrast, display mode) etc. can be set in the device configuration via the display menu.

MADE IN GERMANY

Freely programmable scaling

A freely programmable scaling with min. 25 K measuring span can also be set in the device settings.

Easy assembly

Housings with innovative hinge locking technology (→page 32), sufficient terminal space, labelled circuit boards, and connection-friendly wire rope clamps offer maximum ease of installation and speed.

Best quality

With high-quality components, modern serial production, automated testing/calibration setups, and a 100% final inspection, you will be getting a product with the „Made in Germany" guarantee of quality.

General Technical Data	
Accuracy	±0,2 K + max. ±1,5% Span
Sensor	Pt100 DIN EN 60751 Cl. B
Supply voltage analog 0-10 V	24 V AC/DC (±5%)
Supply voltage analog 4-20 mA	15...36 V DC, depends on liability (Ubmin = 15 V + Rload*0,02A)
Analogue output 0-10 V	3-wire connection, min. load resistance 100 kOhm
Analogue output 4-20 mA	2-wire connection (transmitter), max. RLoad(Ohm) = (+Ub - 15 V) / 0,02 A
Protection class	III
Working range r.H.	0...98% r.H. in contaminant-free, non-condensing air
Storage temperature	-20...+70°C
Approvals	CE, EAC, RoHS

LM1/E

Contact temperature transducer with silicon cable and strap

Messgrösse: temperature
Ausgang: 0-10 V, 4-20 mA, 2 Relay
Besondere Merkmale: 1 freely programmable measurement range

Dimensional Drawing: p.336 #045 | Connection Drawing: p.295 #004 | Price Table: p.435

Measurement range temp.	-50...+180°C
Scales	-50...0°C, -50...+50°C, -50...+150°C, -30...+20°C, -30...+70°C, -20...+50°C, -20...+80°C, -20...+120°C, -20...+150°C, -10...+15°C, 0...+50°C, 0...+100°C, 0...+150°C, 0...+200°C, 0...+250°C, +10...+35°C
Measurement range configuration	1 freely programmable measuring range via the menu input in the display (span min. 25K)
Current consumption at 0-10 V	typ. 10 mA, 30 mA peak current consumption for 50 ms at switching moment at option relay
Current consumption at 4-20 mA	max. 20 mA / output, 40 mA peak current consumption for 50 ms at switching moment at option relay
Alarm output	2 x potential-free change-over contact, 48 V, 1 A
Switching Hysteresis Relay	Temperature: 2K (without display), 0,5...5K adjustable (with display)
Electrical connection	screw terminals max. 1,5 mm²
Cable	2 m silicone cable (max. +180°C)
Cable gland	PG11 high-strength cable gland with strain relief
Material	Contacting block: aluminium
Protection type	IP65
Working temperature	Probe: -50...+180°C, Electronic: -20...+70°C

General Technical Data p.65

LM2/E

Contact temperature transducer with strap

Messgrösse: temperature
Ausgang: 0-10 V, 4-20 mA, 2 Relay
Besondere Merkmale: contacting block: aluminium, 1 freely programmable measurement range

Dimensional Drawing: p.322 #002 | Connection Drawing: p.295 #004 | Price Table: p.435

Measurement range temp.	-30...+110°C
Scales	-50...0°C, -50...+50°C, -50...+150°C, -30...+20°C, -30...+70°C, -20...+50°C, -20...+80°C, -20...+120°C, -20...+150°C, -10...+15°C, 0...+50°C, 0...+100°C, 0...+150°C, 0...+200°C, 0...+250°C, +10...+35°C
Measurement range configuration	1 freely programmable measuring range via the menu input in the display (span min. 25K)
Current consumption at 0-10 V	typ. 10 mA, 30 mA peak current consumption for 50 ms at switching moment at option relay
Current consumption at 4-20 mA	max. 20 mA / output, 40 mA peak current consumption for 50 ms at switching moment at option relay
Alarm output	2 x potential-free change-over contact, 48 V, 1 A
Switching Hysteresis Relay	Temperature: 2K (without display), 0,5...5K adjustable (with display)
Electrical connection	screw terminals max. 1,5 mm²
Cable gland	PG11 high-strength cable gland with strain relief
Material	Contacting block: aluminium
Protection type	IP65
Working temperature	Probe: -30...+110°C, Electronic: -20...+70°C

General Technical Data p.65

AM1/E

Outside temperature transducer

Messgrösse: temperature
Ausgang: 0-10 V, 4-20 mA, 2 Relay
Besondere Merkmale: 16 measuring ranges per device, 1 freely programmable measurement range, optional with LCD-Display, DIP-switch-technology

Dimensional Drawing: p.322 #003 | Connection Drawing: p.295 #004 | Price Table: p.377

Measurement range temp.	-20...+70°C
Scales	-50...0°C, -50...+50°C, -50...+150°C, -30...+20°C, -30...+70°C, -20...+50°C, -20...+80°C, -20...+120°C, -20...+150°C, -10...+15°C, 0...+50°C, 0...+100°C, 0...+150°C, 0...+200°C, 0...+250°C, +10...+35°C
Measurement range configuration	1 freely programmable measuring range via the menu input in the display (span min. 25K)
Current consumption at 0-10 V	typ. 10 mA, 30 mA peak current consumption for 50 ms at switching moment at option relay
Current consumption at 4-20 mA	max. 20 mA / output, 40 mA peak current consumption for 50 ms at switching moment at option relay
Alarm output	2 x potential-free change-over contact, 48 V, 1 A
Switching Hysteresis Relay	Temperature: 2K (without display), 0,5...5K adjustable (with display)
Electrical connection	screw terminals max. 1,5 mm²
Cable gland	PG11 high-strength cable gland with strain relief
Protection type	IP65
Working temperature	Electronic: -20...+70°C

General Technical Data p.65

AM2/E

Outside temperature transducer with sleeve

Messgrösse: temperature
Ausgang: 0-10 V, 4-20 mA, 2 Relay
Besondere Merkmale: ext. protection sleeve with sensor for better measuring, 16 measuring ranges per device, 1 freely programmable measurement range, optional with LCD-Display, DIP-switch-technology

Dimensional Drawing: p.323 #004 | Connection Drawing: p.295 #004 | Price Table: p.378

Measurement range temp.	-20...+70°C
Scales	-50...0°C, -50...+50°C, -50...+150°C, -30...+20°C, -30...+70°C, -20...+50°C, -20...+80°C, -20...+120°C, -20...+150°C, -10...+15°C, 0...+50°C, 0...+100°C, 0...+150°C, 0...+200°C, 0...+250°C, +10...+35°C
Measurement range configuration	1 freely programmable measuring range via the menu input in the display (span min. 25K)
Current consumption at 0-10 V	typ. 10 mA, 30 mA peak current consumption for 50 ms at switching moment at option relay
Current consumption at 4-20 mA	max. 20 mA / output, 40 mA peak current consumption for 50 ms at switching moment at option relay
Alarm output	2 x potential-free change-over contact, 48 V, 1 A
Switching Hysteresis Relay	Temperature: 2K (without display), 0,5...5K adjustable (with display)
Electrical connection	screw terminals max. 1,5 mm²
Cable gland	PG11 high-strength cable gland with strain relief
Material	Protection sleeve: stainless steel VA 1.4571
Protection type	IP65
Working temperature	-20...+70°C

General Technical Data p.65

AM5/E

Outside temperature transducer with EMC thread

Messgrösse: temperature
Ausgang: 0-10 V, 4-20 mA
Besondere Merkmale: EMC cable gland, 16 measuring ranges per device

Dimensional Drawing: p.337 #046 | Connection Drawing: p.295 #004 | Price Table: p.378

Measurement range temp.	-20...+70°C
Scales	-50...0°C, -50...+50°C, -50...+150°C, -30...+20°C, -30...+70°C, -20...+50°C, -20...+80°C, -20...+120°C, -20...+150°C, -10...+15°C, 0...+50°C, 0...+100°C, 0...+150°C, 0...+200°C, 0...+250°C, +10...+35°C
Current consumption at 0-10 V	typ. 10 mA
Current consumption at 4-20 mA	max. 20 mA / output
Switching Hysteresis Relay	2K
Electrical connection	screw terminals max. 1,5 mm²
Cable gland	M16x1,5 high-strength cable gland with strain relief and EMC grounding
Protection type	IP65
Working temperature	Electronic: -20...+70°C

General Technical Data p.65

EM/E

Screwable temperature transducer with brass immersion sleeve

Messgrösse: temperature
Ausgang: 0-10 V, 4-20 mA, 2 Relay
Besondere Merkmale: Pmax 40 bar, immersion sleeve with thread R1/2 inch

Dimensional Drawing: p.324 #007 | Connection Drawing: p.295 #004 | Price Table: p.397

Measurement range temp.	-30...+150°C
Scales	-50...0°C, -50...+50°C, -50...+150°C, -30...+20°C, -30...+70°C, -20...+50°C, -20...+80°C, -20...+120°C, -20...+150°C, -10...+15°C, 0...+50°C, 0...+100°C, 0...+150°C, 0...+200°C, 0...+250°C, +10...+35°C
Measurement range configuration	1 freely programmable measuring range via the menu input in the display (span min. 25K)
Current consumption at 0-10 V	typ. 10 mA, 30 mA peak current consumption for 50 ms at switching moment at option relay
Current consumption at 4-20 mA	max. 20 mA / output, 40 mA peak current consumption for 50 ms at switching moment at option relay
Alarm output	2 x potential-free change-over contact, 48 V, 1 A
Switching Hysteresis Relay	Temperature: 2K (without display), 0,5...5K adjustable (with display)
Electrical connection	screw terminals max. 1,5 mm²
Cable gland	PG11 high-strength cable gland with strain relief
Material	Protection sleeve: stainless steel VA 1.4571, Immersion sleeve: brass nickel-plated, Pmax. 16 bar
Protection type	IP65
Working temperature	Probe: -30...+150°C, Electronic: -20...+70°C

General Technical Data p.65

EM2/E

Screwable temperature transducer with stainless steel immersion sleeve

Messgrösse: temperature
Ausgang: 0-10 V, 4-20 mA, 2 Relay
Besondere Merkmale: Pmax 40 bar, immersion sleeve with thread G1/2 inch

Dimensional Drawing: p.324 #008 | Connection Drawing: p.295 #004 | Price Table: p.398

Measurement range temp.	-30...+150°C
Scales	-50...0°C, -50...+50°C, -50...+150°C, -30...+20°C, -30...+70°C, -20...+50°C, -20...+80°C, -20...+120°C, -20...+150°C, -10...+15°C, 0...+50°C, 0...+100°C, 0...+150°C, 0...+200°C, 0...+250°C, +10...+35°C
Measurement range configuration	1 freely programmable measuring range via the menu input in the display (span min. 25K)
Current consumption at 0-10 V	typ. 10 mA, 30 mA peak current consumption for 50 ms at switching moment at option relay
Current consumption at 4-20 mA	max. 20 mA / output, 40 mA peak current consumption for 50 ms at switching moment at option relay
Alarm output	2 x potential-free change-over contact, 48 V, 1 A
Switching Hysteresis Relay	Temperature: 2K (without display), 0,5...5K adjustable (with display)
Electrical connection	screw terminals max. 1,5 mm²
Cable gland	PG11 high-strength cable gland with strain relief
Material	Protection sleeve: stainless steel VA 1.4571, Immersion sleeve: stainless steel VA 1.4404, Pmax. 40 bar
Protection type	IP65
Working temperature	Probe: -30...+150°C, Electronic: -20...+70°C

General Technical Data p.65

EM3/E

Screwable temperature transducer with connection head form B

Messgrösse: temperature
Ausgang: 0-10 V, 4-20 mA
Besondere Merkmale: Pmax 40 bar, immersion sleeve with thread G1/2 inch

Dimensional Drawing: p.337 #047 | Connection Drawing: p.295 #005 | Price Table: p.398

Measurement range temp.	-30...+180°C
Scales	-50...0°C, -50...+50°C, -50...+150°C, -30...+20°C, -30...+70°C, -20...+50°C, -20...+80°C, -20...+120°C, -20...+150°C, -10...+15°C, 0...+50°C, 0...+100°C, 0...+150°C, 0...+200°C, 0...+250°C, +10...+35°C
Current consumption at 0-10 V	typ. 10 mA
Current consumption at 4-20 mA	max. 20 mA / output
Electrical connection	screw terminals max. 1,5 mm²
Cable gland	M20x1,5 cable gland with strain relief
Material	Protection sleeve: stainless steel VA 1.4571, Immersion sleeve: stainless steel VA 1.4571, Pmax. 40 bar
Protection type	IP54
Working temperature	Probe: -30...+180°C, Electronic: -20...+70°C

General Technical Data p.65

EM4/E

Screwable temperature transducer with connection head form B and neck tube

Messgrösse: temperature
Ausgang: 0-10 V, 4-20 mA
Besondere Merkmale: Pmax 40 bar, thread G1/2 inch, replaceable sensor unit

Dimensional Drawing: p.325 #010 | Connection Drawing: p.295 #005 | Price Table: p.398

Measurement range temp.	-30...+180°C
Scales	-50...0°C, -50...+50°C, -50...+150°C, -30...+20°C, -30...+70°C, -20...+50°C, -20...+80°C, -20...+120°C, -20...+150°C, -10...+15°C, 0...+50°C, 0...+100°C, 0...+150°C, 0...+200°C, 0...+250°C, +10...+35°C
Current consumption at 0-10 V	typ. 10 mA
Current consumption at 4-20 mA	max. 20 mA / output
Electrical connection	screw terminals max. 1,5 mm²
Cable gland	M20x1,5 cable gland with strain relief
Material	Protection sleeve: stainless steel VA 1.4571
Protection type	IP65
Working temperature	Probe: -30...+180°C, Electronic: -20...+70°C

General Technical Data p.65

RM2/E

Screwable temperature transducer with connection head form B and neck tube for high temperatures

Messgrösse: temperature
Ausgang: 0-10 V, 4-20 mA
Besondere Merkmale: screw-in thread G1/2 inch, replaceable sensor unit

Dimensional Drawing: p.325 #010 | Connection Drawing: p.295 #005 | Price Table: p.458

Measurement range temp.	-35...+600°C
Scales	-200...0°C, -200...+100°C, -200...+200°C, -200...+400°C, -200...+600°C, -100...0°C, -100...+100°C, -100...+200°C, -100...+500°C, -80...+20°C, -50...+250°C, -50...+500°C, 0...+300°C, 0...+400°C, 0...+500°C, 0...+600°C
Current consumption at 0-10 V	typ. 10 mA
Current consumption at 4-20 mA	max. 20 mA / output
Electrical connection	screw terminals max. 1,5 mm²
Cable gland	M20x1,5 cable gland with strain relief
Material	Protection sleeve: stainless steel VA 1.4571
Protection type	IP65
Working temperature	Probe: -35...+600°C, Electronic: -20...+70°C

General Technical Data p.65

EM5/E

Screwable temperature transducer with silicon cable

Messgrösse: temperature
Ausgang: 0-10 V, 4-20 mA, 2 Relay
Besondere Merkmale: Pmax 40 bar, thread G1/2 inch

Dimensional Drawing: p.337 #048 | Connection Drawing: p.295 #004 | Price Table: p.399

Measurement range temp.	-30...+180°C
Scales	-50...0°C, -50...+50°C, -50...+150°C, -30...+20°C, -30...+70°C, -20...+50°C, -20...+80°C, -20...+120°C, -20...+150°C, -10...+15°C, 0...+50°C, 0...+100°C, 0...+150°C, 0...+200°C, 0...+250°C, +10...+35°C
Measurement range configuration	1 freely programmable measuring range via the menu input in the display (span min. 25K)
Current consumption at 0-10 V	typ. 10 mA, 30 mA peak current consumption for 50 ms at switching moment at option relay
Current consumption at 4-20 mA	max. 20 mA / output, 40 mA peak current consumption for 50 ms at switching moment at option relay
Alarm output	2 x potential-free change-over contact, 48 V, 1 A
Switching Hysteresis Relay	Temperature: 2K (without display), 0,5...5K adjustable (with display)
Electrical connection	screw terminals max. 1,5 mm²
Cable	2 m silicone cable (max. +180°C)
Cable gland	PG11 high-strength cable gland with strain relief
Material	Protection sleeve: stainless steel VA 1.4571
Protection type	IP65
Working temperature	Probe: -50...+180°C, Electronic: -20...+70°C

General Technical Data p.65

KSM/E

Cable temperature transducer with silicon cable

Messgrösse: temperature
Ausgang: 0-10 V, 4-20 mA, 2 Relay
Besondere Merkmale: moisture sealed rolled, 16 measuring ranges per device, 1 freely programmable measurement range

Dimensional Drawing: p.338 #049 | Connection Drawing: p.295 #004 | Price Table: p.431

Measurement range temp.	-50...+180°C
Scales	-50...0°C, -50...+50°C, -50...+150°C, -30...+20°C, -30...+70°C, -20...+50°C, -20...+80°C, -20...+120°C, -20...+150°C, -10...+15°C, 0...+50°C, 0...+100°C, 0...+150°C, 0...+200°C, 0...+250°C, +10...+35°C
Measurement range configuration	1 freely programmable measuring range via the menu input in the display (span min. 25K)
Current consumption at 0-10 V	typ. 10 mA, 30 mA peak current consumption for 50 ms at switching moment at option relay
Current consumption at 4-20 mA	max. 20 mA / output, 40 mA peak current consumption for 50 ms at switching moment at option relay
Alarm output	2 x potential-free change-over contact, 48 V, 1 A
Switching Hysteresis Relay	Temperature: 2K (without display), 0,5...5K adjustable (with display)
Electrical connection	screw terminals max. 1,5 mm²
Cable	2 m silicone cable (max. +180°C)
Cable gland	PG11 high-strength cable gland with strain relief
Material	Protection sleeve: stainless steel VA 1.4571
Protection type	IP65, IP67 (probe, moisture sealed rolled)
Working temperature	Probe: -50...+180°C, Electronic: -20...+70°C

General Technical Data p.65

KTM/E

Cable temperature transducer with PTFE cable

Messgrösse: temperature
Ausgang: 0-10 V, 4-20 mA, 2 Relay
Besondere Merkmale: 1 freely programmable measurement range

Dimensional Drawing: p.338 #049 | Connection Drawing: p.295 #004 | Price Table: p.432

Measurement range temp.	-50...+250°C
Scales	-50...0°C, -50...+50°C, -50...+150°C, -30...+20°C, -30...+70°C, -20...+50°C, -20...+80°C, -20...+120°C, -20...+150°C, -10...+15°C, 0...+50°C, 0...+100°C, 0...+150°C, 0...+200°C, 0...+250°C, +10...+35°C
Measurement range configuration	1 freely programmable measuring range via the menu input in the display (span min. 25K)
Current consumption at 0-10 V	typ. 10 mA, 30 mA peak current consumption for 50 ms at switching moment at option relay
Current consumption at 4-20 mA	max. 20 mA / output, 40 mA peak current consumption for 50 ms at switching moment at option relay
Alarm output	2 x potential-free change-over contact, 48 V, 1 A
Switching Hysteresis Relay	Temperature: 2K (without display), 0,5...5K adjustable (with display)
Electrical connection	screw terminals max. 1,5 mm²
Cable	2 m PTFE cable (2x0,22 mm², max. +260°C)
Cable gland	PG11 high-strength cable gland with strain relief
Material	Protection sleeve: stainless steel VA 1.4571
Protection type	Gehäuse: IP65, Fühler: IP67 (feuchtedicht rolliert)
Working temperature	Probe: -70...+250°C, Electronic: -20...+70°C

General Technical Data p.65

KM/E

Duct temperature transducer

Messgrösse: temperature
Ausgang: 0-10 V, 4-20 mA, 2 Relay
Besondere Merkmale: easy to install with included mounting flange, 16 measuring ranges per device, 1 freely programmable measurement range

Dimensional Drawing: p.329 #022 | Connection Drawing: p.295 #004 | Price Table: p.429

Measurement range temp.	-30...+150°C
Scales	-50...0°C, -50...+50°C, -50...+150°C, -30...+20°C, -30...+70°C, -20...+50°C, -20...+80°C, -20...+120°C, -20...+150°C, -10...+15°C, 0...+50°C, 0...+100°C, 0...+150°C, 0...+200°C, 0...+250°C, +10...+35°C
Measurement range configuration	1 freely programmable measuring range via the menu input in the display (span min. 25K)
Current consumption at 0-10 V	typ. 10 mA, 30 mA peak current consumption for 50 ms at switching moment at option relay
Current consumption at 4-20 mA	max. 20 mA / output, 40 mA peak current consumption for 50 ms at switching moment at option relay
Alarm output	2 x potential-free change-over contact, 48 V, 1 A
Switching Hysteresis Relay	Temperature: 2K (without display), 0,5...5K adjustable (with display)
Electrical connection	screw terminals max. 1,5 mm²
Cable gland	PG11 high-strength cable gland with strain relief
Material	Protection sleeve: stainless steel VA 1.4571
Protection type	IP65
Working temperature	Probe: -30...+150°C, Electronic: -20...+70°C

General Technical Data p.65

MM/E

Average temperature transducer

Messgrösse: temperature
Ausgang: 0-10 V, 4-20 mA, 2 Relay
Besondere Merkmale: 1 freely programmable measurement range

Dimensional Drawing: p.330 #026 | Connection Drawing: p.295 #004 | Price Table: p.441

Measurement range temp.	-30...+80°C
Scales	-50...0°C, -50...+50°C, -50...+150°C, -30...+20°C, -30...+70°C, -20...+50°C, -20...+80°C, -20...+120°C, -20...+150°C, -10...+15°C, 0...+50°C, 0...+100°C, 0...+150°C, 0...+200°C, 0...+250°C, +10...+35°C
Measurement range configuration	1 freely programmable measuring range via the menu input in the display (span min. 25K)
Current consumption at 0-10 V	typ. 10 mA, 30 mA peak current consumption for 50 ms at switching moment at option relay
Current consumption at 4-20 mA	max. 20 mA / output, 40 mA peak current consumption for 50 ms at switching moment at option relay
Alarm output	2 x potential-free change-over contact, 48 V, 1 A
Switching Hysteresis Relay	Temperature: 2K (without display), 0,5...5K adjustable (with display)
Electrical connection	screw terminals max. 1,5 mm²
Cable gland	PG11 high-strength cable gland with strain relief
Material	Rod: copper (oxidation protective coating, black)
Protection type	IP65
Working temperature	Probe: -30...+80°C, Electronic: -20...+70°C

General Technical Data p.65

OM1/E

Surface temperature transducer–self-adhering

Messgrösse: temperature
Ausgang: 0-10 V, 4-20 mA, 2 Relay
Besondere Merkmale: aluminium contacting block, incl. self-adhesive cap

Dimensional Drawing: p.338 #050 | Connection Drawing: p.295 #004 | Price Table: p.446

Measurement range temp.	-20...+105°C
Scales	-50...0°C, -50...+50°C, -50...+150°C, -30...+20°C, -30...+70°C, -20...+50°C, -20...+80°C, -20...+120°C, -20...+150°C, -10...+15°C, 0...+50°C, 0...+100°C, 0...+150°C, 0...+200°C, 0...+250°C, +10...+35°C
Measurement range configuration	1 freely programmable measuring range via the menu input in the display (span min. 25K)
Current consumption at 0-10 V	typ. 10 mA, 30 mA peak current consumption for 50 ms at switching moment at option relay
Current consumption at 4-20 mA	max. 20 mA / output, 40 mA peak current consumption for 50 ms at switching moment at option relay
Alarm output	2 x potential-free change-over contact, 48 V, 1 A
Switching Hysteresis Relay	Temperature: 2K (without display), 0,5...5K adjustable (with display)
Electrical connection	screw terminals max. 1,5 mm²
Cable	2 m PVC cable (max. +105°C)
Cable gland	PG11 high-strength cable gland with strain relief
Material	Contacting block: aluminium
Protection type	IP65
Working temperature	Probe: -20...+105°C, Electronic: -20...+70°C

General Technical Data p.65

OM3/E

Surface temperature transducer with stainless steel block

Messgrösse: temperature
Ausgang: 0-10 V, 4-20 mA, 2 Relay
Besondere Merkmale: aluminium contacting block

Dimensional Drawing: p.338 #051 | Connection Drawing: p.295 #004 | Price Table: p.447

Measurement range temp.	-40...+250°C
Scales	-50...0°C, -50...+50°C, -50...+150°C, -30...+20°C, -30...+70°C, -20...+50°C, -20...+80°C, -20...+120°C, -20...+150°C, -10...+15°C, 0...+50°C, 0...+100°C, 0...+150°C, 0...+200°C, 0...+250°C, +10...+35°C
Measurement range configuration	1 freely programmable measuring range via the menu input in the display (span min. 25K)
Current consumption at 0-10 V	typ. 10 mA, 30 mA peak current consumption for 50 ms at switching moment at option relay
Current consumption at 4-20 mA	max. 20 mA / output, 40 mA peak current consumption for 50 ms at switching moment at option relay
Alarm output	2 x potential-free change-over contact, 48 V, 1 A
Switching Hysteresis Relay	Temperature: 2K (without display), 0,5...5K adjustable (with display)
Electrical connection	screw terminals max. 1,5 mm^2
Cable	2 m glass fibre/stainless steel netting (2x0,22 mm^2, max. +400°C)
Cable gland	PG11 high-strength cable gland with strain relief
Material	Contacting block: stainless steel VA 1.4571
Protection type	IP65 (housing), IP54 (probe)
Working temperature	Probe: -40...+400°C, Electronic: -20...+70°C

General Technical Data p.65

OM4/E

Surface temperature transducer with magnet

Messgrösse: temperature
Ausgang: 0-10 V, 4-20 mA, 2 Relay
Besondere Merkmale: magnetic adhesive force 90 N

Dimensional Drawing: p.339 #052 | Connection Drawing: p.295 #004 | Price Table: p.447

Measurement range temp.	-40...+250°C
Scales	-50...0°C, -50...+50°C, -50...+150°C, -30...+20°C, -30...+70°C, -20...+50°C, -20...+80°C, -20...+120°C, -20...+150°C, -10...+15°C, 0...+50°C, 0...+100°C, 0...+150°C, 0...+200°C, 0...+250°C, +10...+35°C
Measurement range configuration	1 freely programmable measuring range via the menu input in the display (span min. 25K)
Current consumption at 0-10 V	typ. 10 mA, 30 mA peak current consumption for 50 ms at switching moment at option relay
Current consumption at 4-20 mA	max. 20 mA / output, 40 mA peak current consumption for 50 ms at switching moment at option relay
Alarm output	2 x potential-free change-over contact, 48 V, 1 A
Switching Hysteresis Relay	Temperature: 2K (without display), 0,5...5K adjustable (with display)
Electrical connection	screw terminals max. 1,5 mm²
Cable	2 m silicone cable (max. +180°C)
Cable gland	PG11 high-strength cable gland with strain relief
Protection type	IP65 (housing), IP54 (probe)
Working temperature	Probe: -40...+400°C, Electronic: -20...+70°C

General Technical Data p.65

TPM2/E

Temperature transducer with stainless steel room pendulum

Messgrösse: temperature
Ausgang: 0-10 V, 4-20 mA, 2 Relay
Besondere Merkmale: stainless steel pendulum

Dimensional Drawing: p.339 #053 | Connection Drawing: p.295 #004 | Price Table: p.469

Measurement range temp.	-30...+100°C
Scales	-50...0°C, -50...+50°C, -50...+150°C, -30...+20°C, -30...+70°C, -20...+50°C, -20...+80°C, -20...+120°C, -20...+150°C, -10...+15°C, 0...+50°C, 0...+100°C, 0...+150°C, 0...+200°C, 0...+250°C, +10...+35°C
Measurement range configuration	1 freely programmable measuring range via the menu input in the display (span min. 25K)
Current consumption at 0-10 V	typ. 10 mA, 30 mA peak current consumption for 50 ms at switching moment at option relay
Current consumption at 4-20 mA	max. 20 mA / output, 40 mA peak current consumption for 50 ms at switching moment at option relay
Alarm output	2 x potential-free change-over contact, 48 V, 1 A
Switching Hysteresis Relay	Temperature: 2K (without display), 0,5...5K adjustable (with display)
Electrical connection	screw terminals max. 1,5 mm²
Cable	2 m PVC cable (max. +105°C)
Cable gland	PG11 high-strength cable gland with strain relief
Material	Protection sleeve: stainless steel VA 1.4571
Protection type	IP65
Working temperature	Probe: -30...+105°C, Electronic: -20...+70°C

General Technical Data p.65

RTM1/E

Room temperature transducer

Messgrösse: temperature
Ausgang: 0-10 V, 4-20 mA, 2 Relay
Besondere Merkmale: modern housing design, mounting on-wall or on junction box

Dimensional Drawing: p.333 #034 | Connection Drawing: p.295 #006 | Price Table: p.462

Measurement range temp.	0...+50°C
Scales	-50...0°C, -50...+50°C, -50...+150°C, -30...+20°C, -30...+70°C, -20...+50°C, -20...+80°C, -20...+120°C, -20...+150°C, -10...+15°C, 0...+50°C, 0...+100°C, 0...+150°C, 0...+200°C, 0...+250°C, +10...+35°C
Measurement range configuration	1 freely programmable measuring range via the menu input in the display (span min. 25K)
Current consumption at 0-10 V	typ. 10 mA, 30 mA peak current consumption for 50 ms at switching moment at option relay
Current consumption at 4-20 mA	max. 20 mA / output, 40 mA peak current consumption for 50 ms at switching moment at option relay
Alarm output	2 x potential-free change-over contact, 48 V, 1 A
Switching Hysteresis Relay	Temperature: 2K (without display), 0,5...5K adjustable (with display)
Electrical connection	screw terminals max. 1,5 mm²
Cable gland	on the back or housing side (predetermined breaking point)
Protection type	IP30, IP20 (with display)
Working temperature	Electronic: -20...+70°C

General Technical Data p.65

UM1/E

Flush-mounted room temperature transducer

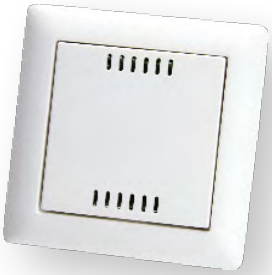

Messgrösse: temperature
Ausgang: 0-10 V, 4-20 mA
Besondere Merkmale: switch program selectable

Dimensional Drawing: p.339 #054 | Connection Drawing: p.296 #007 | Price Table: p.471

Measurement range temp.	0...+50°C
Scales	-50...0°C, -50...+50°C, -50...+150°C, -30...+20°C, -30...+70°C, -20...+50°C, -20...+80°C, -20...+120°C, -20...+150°C, -10...+15°C, 0...+50°C, 0...+100°C, 0...+150°C, 0...+200°C, 0...+250°C, +10...+35°C
Current consumption at 0-10 V	typ. 10 mA
Current consumption at 4-20 mA	max. 20 mA / output
Electrical connection	push terminals max. 1,5 mm²
Light switch program	Busch Jäger (BJ), Gira (G), Jung (J), Berker (B), Merten (M)
Protection type	IP20
Working temperature	Electronic: -20...+70°C

General Technical Data p.65

TPM1/E

Radiated pendulum temperature transducer with aluminium sphere

Messgrösse: temperature
Ausgang: 0-10 V, 4-20 mA, 2 Relay
Besondere Merkmale: aluminium globe, measuring of the thermal radiation

Dimensional Drawing: p.340 #055 | Connection Drawing: p.295 #004 | Price Table: p.469

Measurement range temp.	-30...+75°C
Scales	-50...0°C, -50...+50°C, -50...+150°C, -30...+20°C, -30...+70°C, -20...+50°C, -20...+80°C, -20...+120°C, -20...+150°C, -10...+15°C, 0...+50°C, 0...+100°C, 0...+150°C, 0...+200°C, 0...+250°C, +10...+35°C
Measurement range configuration	1 freely programmable measuring range via the menu input in the display (span min. 25K)
Current consumption at 0-10 V	typ. 10 mA, 30 mA peak current consumption for 50 ms at switching moment at option relay
Current consumption at 4-20 mA	max. 20 mA / output, 40 mA peak current consumption for 50 ms at switching moment at option relay
Alarm output	2 x potential-free change-over contact, 48 V, 1 A
Switching Hysteresis Relay	Temperature: 2K (without display), 0,5...5K adjustable (with display)
Electrical connection	screw terminals max. 1,5 mm²
Cable	2 m PVC cable (max. +105°C)
Cable gland	PG11 high-strength cable gland with strain relief
Material	Globe: aluminium (black)
Protection type	IP65 (housing), IP54 (probe)
Working temperature	Probe: -30...+75°C, Electronic: -20...+70°C

General Technical Data p.65

Thermocouples

Our thermocouples consist of two interconnected wires with different materials that generate a voltage in mV when there is a temperature difference. They have a very fast response time of less than 1 s and a large measuring range from -220 to +1150°C.

Thermocouple types

Thermocouples come in different metal combinations; we offer Type J (Fe-CuNi) and Type K (NiCr-Ni) thermocouples.

High precision

For optimal measurement results, the thermocouples are available with Class 1 precision with a response time of less than 1 s. By incorporating them into refractory magnesium oxide, they can withstand the most adverse environmental conditions (pressure, vibration, shock) and thus deliver a long service life.

Resistance up to +1150°C

Type K jacket thermocouples with the Inconel 600 jacket material (nickel-chromium-iron alloys) are flexible and can measure temperatures of up to +1150°C.

Formats & special formats

The thermocouples are available with different housings, fittings, process connections, and line materials (PVC, silicone, glass silk-stainless steel mesh, etc.) in different lengths. In addition, we can create a custom sensor format as the optimal solution for every requirement. (→page 24)

Easy assembly

Thermocouples with a bayonet lock, TE connectors, or wire end ferrules offer maximum freedom and speed of installation.

Best quality

With high-quality components, modern serial production, automated testing/calibration setups, and a 100% final inspection, you will be getting a product with the „Made in Germany" guarantee of quality.

General Technical Data	
Accuracy	class 1 (±1,5 K up to 375°C, else 0,004 * |t|)
Approvals	CE, EAC, RoHS

BF1/T

Bayonet thermocouple with 120° measuring peak

Measurand: temperature
Output: Type J, K, L
Highlights: 120° measuring peak, Bayonet cap: Ø 12 or 14 mm

Dimensional Drawing: p.340 #056

Price Table: p.380

Measurement range temp.	-30...+350°C
Thermocouple	type J (Fe-CuNi), K (NiCr-Ni), L (Fe-CuNi) according to DIN EN 60584, IEC 584
Electrical connection	stripped ends with ferrules
Cable	2 m up to 5 m glass fibre/stainless steel netting (2x0,22 mm², max. +400°C) with core cable ends
Material	Probe head: stainless steel VA 1.4541
Protection type	IP54
Storage temperature	-20...+70°C

General Technical Data p.88

BF2/T

Bayonet thermocouple with plane measuring peak

Measurand: temperature
Output: Type J, K, L
Highlights: Plane Messspitze, Bajonettkappe: Ø 12 oder 14 mm

Dimensional Drawing: p.340 #057

Price Table: p.381

Measurement range temp.	-30...+350°C
Thermocouple	type J (Fe-CuNi), K (NiCr-Ni), L (Fe-CuNi) according to DIN EN 60584, IEC 584
Electrical connection	stripped ends with ferrules
Cable	2 m up to 5 m glass fibre/stainless steel netting (2x0,22 mm², max. +400°C) with core cable ends
Material	Probe head: stainless steel VA 1.4541
Protection type	IP54
Storage temperature	-20...+70°C

General Technical Data p.88

EF4/T

Screw-in thermocouple with terminal head form B and neck tube

Measurand: temperature
Output: Type J, K, L
Highlights: thread G1/2 inch, replaceable sensor unit

Dimensional Drawing: p.325 #010 | Connection Drawing: p.296 #008 | Price Table: p.395

Measurement range temp.	-200...+800°C (type K), -200...+750°C (type J, L)
Thermocouple	type K (NiCr-Ni), type J (Fe-CuNi), type L (Fe-CuNi) according to DIN EN 60584, IEC 584, replaceable gauge slide
Electrical connection	screw terminals max. 2,5 mm²
Cable gland	M20x1,5 cable gland with strain relief
Material	Protection sleeve: stainless steel VA 1.4571
Protection type	IP65
Storage temperature	-20...+70°C

General Technical Data p.88

HE/T

Hand infeed thermocouple with PTFE-hand grip and silicone-cable

Measurand: temperature
Output: Type J, K
Highlights: PTFE hand grip, water-vapour-proof casted, bend protection: stainless steel

Dimensional Drawing: p.341 #058 | Price Table: p.426

Measurement range temp.	-50...+600°C
Thermocouple	type K (NiCr-Ni), type J (Fe-CuNi) according to DIN EN 60584, IEC 584
Electrical connection	TC-Mini-Connector
Cable	1 m up to 4 m silicone cable (2x0,22 mm², max +180°C) with TC-Mini-Connector
Material	Probe: stainless steel VA 1.4571, Hand grip: PTFE, Bend protection: stainless steel
Protection type	IP65 water-vapour-proof cast
Storage temperature	-20...+70°C

General Technical Data p.88

KS/T

Cable thermocouple with TC mini-connector

Measurand: temperature
Output: Type J, K
Highlights: moisture sealed rolled, Protection sleeve: stainless steel, TC-Mini-Connector

Dimensional Drawing: p.341 #059

Price Table: p.431

Measurement range temp.	-50...+200°C
Thermocouple	type K (NiCr-Ni), type J (Fe-CuNi) according to DIN EN 60584, IEC 584
Electrical connection	TC-Mini-Connector
Cable	2 m silicone cable with TC Mini-Connector
Leakage resistance	> 50MOhm, at +20°C (250V DC)
Material	Protection sleeve: stainless steel VA 1.4571
Protection type	IP65 (moisture sealed rolled)
Working temperature	Probe: -50...+200°C, Plug: -50...+120°C

General Technical Data p.88

MT1/T

Sheathed thermocouple with TC-mini-connector

Measurand: temperature
Output: Type K
Highlights: bandable

Dimensional Drawing: p.341 #060

Price Table: p.441

Measurement range temp.	-220...+1100°C
Thermocouple	type K (NiCr-Ni) according to DIN EN 60584, IEC 584
Response time (t90)	approx. 3 s
Isolation	magnesiumoxid (MgO, high compressed)
Electrical connection	TC-Mini-Connector
Mantle material	Inconel 600 (2.4816), other materials on request
Protection type	IP65
Working temperature	Plug: -50...+120°C

General Technical Data p.88

MJP/E

Sheathed thermocouple type J with 2 m PVC-cable

Measurand: temperature
Output: Type J
Highlights: bendable, mantle material: stainless steel

Dimensional Drawing: p.342 #061

Price Table: p.437

Measurement range temp.	-220...+850°C
Thermocouple	Fe-CuNi, type J according to DIN EN 60584, IEC 584 (potential free)
Response time (t90)	< 1 s (class 1)
Isolation	magnesiumoxid (MgO, high compressed)
Cable	2 m PVC cable (max. +105°C) with core cable ends
Leakage resistance	> 50MOhm, at +20°C (250V DC)
Thermocouple size	Ø 1,0 - 6,0 mm, 150 - 500 mm (other on request)
Mantle material	stainless steel 1.4541
Protection type	IP65

General Technical Data p.88

MJS/E

Sheathed thermocouple type J with 2 m silicone-cable

Measurand: temperature
Output: Type J
Highlights: bendable, mantle material: stainless steel, with core cable ends

Dimensional Drawing: p.342 #061

Price Table: p.438

Measurement range temp.	-220...+850°C
Thermocouple	Fe-CuNi, type J according to DIN EN 60584, IEC 584 (potential free)
Response time (t90)	< 1 s (class 1)
Isolation	magnesiumoxid (MgO, high compressed)
Cable	2 m silicone cable (max. +180°C) with core cable ends
Leakage resistance	> 50MOhm, at +20°C (250V DC)
Thermocouple size	Ø 1,0 - 6,0 mm, 150 - 500 mm (other on request)
Mantle material	stainless steel 1.4541
Protection type	IP65

General Technical Data p.88

MJG/E

Sheathed thermocouple type J with 2 m glass fibre-/stainless steel cable

Measurand: temperature
Output: Type J
Highlights: bendable, mantle material: stainless steel

Dimensional Drawing: p.342 #061

Price Table: p.437

Measurement range temp.	-220...+850°C
Thermocouple	Fe-CuNi, type J according to DIN EN 60584, IEC 584 (potential free)
Response time (t90)	< 1 s (class 1)
Isolation	magnesiumoxid (MgO, high compressed)
Cable	2 m glass fibre/stainless steel netting (2x0,22 mm², max. +400°C) with core cable ends
Leakage resis-tance	> 50MOhm, at +20°C (250V DC)
Thermocouple size	Ø 1,0 - 6,0 mm, 150 - 500 mm (other on request)
Mantle material	stainless steel 1.4541
Protection type	IP54

General Technical Data p.88

MKP/E

Sheathed thermocouple type K with 2 m PVC-cable

Measurand: temperature
Output: Type K
Highlights: bendable, mantle material: Inconel 600 - other materials on request, with core cable ends

Dimensional Drawing: p.342 #061

Price Table: p.439

Measurement range temp.	-220...+1150°C
Thermocouple	NiCr-Ni, type K according to DIN EN 60584, IEC 584 (potential free)
Response time (t90)	< 1 s (class 1)
Isolation	magnesiumoxid (MgO, high compressed)
Cable	2 m PVC cable (max. +105°C) with core cable ends
Leakage resis-tance	> 50MOhm, at +20°C (250V DC)
Thermocouple size	Ø 1,0 - 6,0 mm, 150 - 500 mm (other on request)
Mantle material	Inconel 600 (2.4816), other materials on request
Protection type	IP65

General Technical Data p.88

MKS/E

Sheathed thermocouple type K with 2 m silicone-cable

Measurand: temperature
Output: Type K
Highlights: bendable, mantle material: Inconel 600 - other materials on request, with core cable ends

Dimensional Drawing: p.342 #061

Price Table: p.439

Measurement range temp.	-220...+1150°C
Thermocouple	NiCr-Ni, type K according to DIN EN 60584, IEC 584 (potential free)
Response time (t90)	< 1 s (class 1)
Isolation	magnesiumoxid (MgO, high compressed)
Cable	2 m silicone cable (max. +180°C) with core cable ends
Leakage resistance	> 50MOhm, at +20°C (250V DC)
Thermocouple size	Ø 1,0 - 6,0 mm, 150 - 500 mm (other on request)
Mantle material	Inconel 600 (2.4816), other materials on request
Protection type	IP65

General Technical Data p.88

MKG/E

Sheathed thermocouple type K with 2 m glass fibre-/stainless steel cable

Measurand: temperature
Output: Type K
Highlights: bendable, mantle material: Inconel 600 - other materials on request, with core cable ends

Dimensional Drawing: p.342 #061

Price Table: p.438

Measurement range temp.	-220...+1150°C
Thermocouple	NiCr-Ni, type K according to DIN EN 60584, IEC 584 (potential free)
Response time (t90)	< 1 s (class 1)
Isolation	magnesiumoxid (MgO, high compressed)
Cable	2 m glass fibre/stainless steel netting (2x0,22 mm², max. +400°C) with core cable ends
Leakage resis-tance	> 50MOhm, at +20°C (250V DC)
Thermocouple size	Ø 1,0 - 6,0 mm, 150 - 500 mm (other on request)
Mantle material	Inconel 600 (2.4816), other materials on request
Protection type	IP54

General Technical Data p.88

MLS/E

Sheathed thermocouple type L with 2 m silicone cable

Measurand: temperature
Output: Type L
Highlights: bendable, mantle material: stainless steel, with core cable ends

Dimensional Drawing: p.342 #061

Price Table: p.440

Measurement range temp.	-220...+700°C
Thermocouple	Fe-CuNi, type L according to DIN EN 60584, IEC 584 (potential free)
Response time (t90)	< 1 s (class 1)
Isolation	magnesiumoxid (MgO, high compressed)
Cable	2 m silicone cable (max. +180°C) with core cable ends
Leakage resistance	> 50MOhm, at +20°C (250V DC)
Thermocouple size	Ø 1,0 - 6,0 mm, 150 - 500 mm (other on request)
Mantle material	stainless steel 1.4541
Protection type	IP65

General Technical Data p.88

TPK/E

Thermocouples type K with TE mini-connector

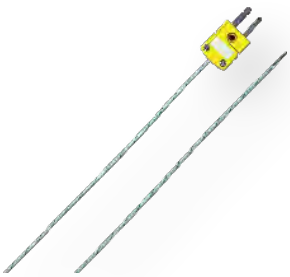

Measurand: temperature
Output: Type K
Highlights: quick response time

Dimensional Drawing: p.342 #062

Price Table: p.469

Measurement range temp.	-40...+400°C
Thermocouple	type K (NiCr-Ni) according to DIN EN 60584, IEC 584
Response time (t90)	< 5 s
Electrical connection	TC-Mini-Connector
Cable	1500 mm glass fibre (max. +400°C), flexible, pre-mounted TE mini plug connector type K
Cable diameter	1.2 mm
Protection type	IP00
Working temperature	Plug: -50...+120°C

General Technical Data p.88

Room Control Units

Our room controllers measure the ambient temperature via a resistance sensor through which a measuring current is conducted. If the temperature changes, the conductivity (resistance) of the sensor increases or decreases.

Variety of available sensors

A large selection of platinum sensors (Pt100, Pt500, Pt1000), semiconductor sensors (NTC, PTC, KTY), and also IC sensors (LM235Z) are available as sensor elements.

Individual controls

The measuring devices can be individually equipped with various operating elements:

- max. 5 buttons
- max. 4 LEDs (AC or DC)
- Rotary switch with up to 6 levels
- Each stage can have its own resistance circuit
- Outputs can be routed to a terminal
- Rocker switch with 2 or 3 levels
- LM235Z with adjustment option
- Up to 2 potentiometers with adjustment potentiometers or fixed series resistor
- Different angles of rotation possible
- Key-operated switch

Four-wire connection

To compensate for line and connecting resistance, the temperature sensors can be made with a 3- or 4-wire connection.

Capacitors & varistors

Voltage peaks and overvoltages can be avoided by using capacitors and varistors as necessary. An additional adjustment potentiometer is available for IC sensors (LM235Z).

Easy assembly

Housings with innovative snap lock technology (→page 32), sufficient terminal space, labelled circuit boards, and connection-friendly wire rope clamps offer maximum ease of installation and speed.

Best quality

With high-quality components, modern serial production, automated testing/calibration setups, and a 100% final inspection, you will be getting a product with the „Made in Germany“ guarantee of quality.

MADE IN GERMANY

On-wall types

› Sensor
› Poti

› Sensor
› Rotary switch
› Poti

› Sensor
› 2 LED
› Button
› Poti

› Sensor
› Rocker
› Button
› 2 LED
› Poti

› Sensor
› Poti
› 2 LED
› Key switch

› Sensor
› Rocker
› Rotary switch
› 4 LED
› 4 buttons
› Poti

In-wall types

› Sensor
› Poti

› Sensor
› Poti
› Rotary switch

› Sensor
› Poti
› 2 LED

› Sensor
› Rotary switch
› 2 LED

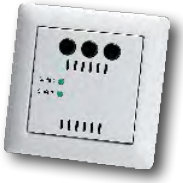

› Sensor
› 3 buttons
› 2 LED

› Sensor
› 4 LED
› Poti

General Technical Data	
Measurement range temp.	-30...+60°C
Sensor	Pt100, Pt500, Pt1000, Ni1000, KTY, NTC, LM235Z (other on request)
Circuit type	2-wire connection
Measurement current	approx. 1 mA
Leakage resistance	> 100 MOhm, at +20°C (500 V DC)
Protection type	IP30
Protection class	III
Approvals	CE, EAC, RoHS

RF1/R

Room Temperature Sensor with Potentiometer

Measurand: temperature
Output: passive sensor
Highlights: with potentiometer

Dimensional Drawing: p.342 #063 | Connection Drawing: p.296 #009 | Price Table: p.452

Electrical connection	screw terminals max. 1,5 mm²
Cable gland	on the back or housing side (predetermined breaking point)
Equipment	1 kOhm Poti (±5%)
Storage temperature	-20...+70°C
Notice	On-wall temperature probes are customized products and non-returnable.

General Technical Data p.97

RF2/R

Room Temperature Sensor with Push-Button and LED

Measurand: temperature
Output: passive sensor
Highlights: with push-button and LED

Dimensional Drawing: p.343 #064 | Connection Drawing: p.297 #010 | Price Table: p.452

Electrical connection	screw terminals max. 1,5 mm²
Cable gland	on the back or housing side (predetermined breaking point)
Equipment	1 push-button (white), 1 LED (24 V DC, green)
Storage temperature	-20...+70°C
Notice	On-wall temperature probes are customized products and non-returnable.

General Technical Data p.97

RF3/R

Room Temperature Sensor with Potentiometer and Rotary Switch

Measurand: temperature
Output: passive sensor
Highlights: with potentiometer and rotary switch

Dimensional Drawing: p.343 #065 | Connection Drawing: p.297 #011 | Price Table: p.452

Electrical connection	screw terminals max. 1,5 mm²
Cable gland	on the back or housing side (predetermined breaking point)
Equipment	1 kOhm Poti (±5%), 4-ranks rotary switch (24 V DC)
Storage temperature	-20...+70°C
Notice	On-wall temperature probes are customized products and non-returnable.

General Technical Data p.97

RF4/R

Room Temperature Sensor with Potentiometer, Push-Button and LED

Measurand: temperature
Output: passive sensor
Highlights: with potentiometer, push-button and LED

Dimensional Drawing: p.343 #066 | Connection Drawing: p.297 #012 | Price Table: p.453

Electrical connection	screw terminals max. 1,5 mm²
Cable gland	on the back or housing side (predetermined breaking point)
Equipment	1 kOhm Poti (±5%), 1 push-button (white), 1 LED (24 V DC, green)
Storage temperature	-20...+70°C
Notice	On-wall temperature probes are customized products and non-returnable.

General Technical Data p.97

RF5/R

Room Temperature Sensor with Poti, Push-Button and 2 LEDs

Measurand: temperature
Output: passive sensor
Highlights: with potentiometer, push-button and 2 LEDs

Dimensional Drawing: p.344 #067 | Connection Drawing: p.298 #013 | Price Table: p.453

Electrical connection	screw terminals max. 1,5 mm²
Cable gland	on the back or housing side (predetermined breaking point)
Equipment	1 kOhm Poti (±5%), 1 push-button (white), 1 LED (24 V DC, green), 1 LED (24 V DC, red)
Storage temperature	-20...+70°C
Notice	On-wall temperature probes are customized products and non-returnable.

General Technical Data p.97

RF6/R

Room Temperature Sensor with Poti, Rotary Switch, Rocker Switch, 4 Push-Buttons and 4 LEDs

Measurand: temperature
Output: passive sensor
Highlights: with potentiometer, rotary switch, rocker switch, 4 push-buttons and 4 LEDs

Dimensional Drawing: p.344 #068 | Connection Drawing: p.298 #014 | Price Table: p.454

Electrical connection	screw terminals max. 1,5 mm²
Cable gland	on the back or housing side (predetermined breaking point)
Equipment	1 kOhm Poti (±5%), 4-ranks rotary switch (24 V DC), 4 push-buttons (white), rocker switch, 2 LED (24 V DC, green), 1 LED (24 V DC, yellow), 1 LED (24 V DC, red)
Storage temperature	-20...+70°C
Notice	On-wall temperature probes are customized products and non-returnable.

General Technical Data p.97

UP1/R

In-Wall Room Temperature Sensor with Potentiometer

Measurand: temperature
Output: passive sensor
Highlights: potentiometer

Dimensional Drawing: p.344 #069 | Connection Drawing: p.298 #015 | Price Table: p.471

Electrical connection	push terminals max. 1,5 mm²
Light switch program	GIRA Standard 55, pure white satin (other on request)
Equipment	1 kOhm Poti (±5%)
Storage temperature	-20...+50°C
Notice	In-wall temperature probes are customized products and non-returnable.

General Technical Data p.97

UP2/R

In-Wall Room Temperature Sensor with Push-Button and LED

Measurand: temperature
Output: passive sensor
Highlights: button, green LED

Dimensional Drawing: p.345 #070 | Connection Drawing: p.299 #016 | Price Table: p.472

Electrical connection	push terminals max. 1,5 mm²
Light switch program	GIRA Standard 55, pure white satin (other on request)
Equipment	1 push-button (black), 1 LED (24 V DC, green)
Storage temperature	-20...+50°C
Notice	In-wall temperature probes are customized products and non-returnable.

General Technical Data p.97

UP3/R

In-Wall Room Temperature Sensor with Potentiometer and Rotary Switch

Measurand: temperature
Output: passive sensor
Highlights: 1 kOhm poti, 4-ary rotary switch

Dimensional Drawing: p.345 #071 | Connection Drawing: p.299 #017 | Price Table: p.472

Electrical connection	push terminals max. 1,5 mm²
Light switch program	GIRA Standard 55, pure white satin (other on request)
Equipment	1 kOhm Poti (±5%), 4-ranks rotary switch (24 V DC)
Storage temperature	-20...+50°C
Notice	In-wall temperature probes are customized products and non-returnable.

General Technical Data p.97

UP4/R

In-Wall Room Temperature Sensor with Potentiometer, Push-Button and LED

Measurand: temperature
Output: passive sensor
Highlights: 1 kOhm poti, button, green LED

Dimensional Drawing: p.345 #072 | Connection Drawing: p.299 #018 | Price Table: p.473

Electrical connection	push terminals max. 1,5 mm²
Light switch program	GIRA Standard 55, pure white satin (other on request)
Equipment	1 kOhm Poti (±5%), 1 push-button (black), 1 LED (24 V DC, green)
Storage temperature	-20...+50°C
Notice	In-wall temperature probes are customized products and non-returnable.

General Technical Data p.97

UP5/R

In-Wall Room Temperature Sensor with Poti, Rotary Switch and 2 LEDs

Measurand: temperature
Output: passive sensor
Highlights: 1 kOhm poti, 3-ary rotary switch, 2 LED

Dimensional Drawing: p.346 #073 | Connection Drawing: p.300 #019 | Price Table: p.473

Electrical connection	push terminals max. 1,5 mm²
Light switch program	GIRA Standard 55, pure white satin (other on request)
Equipment	1 kOhm Poti (±5%), 3-ranks rotary switch (24 V DC), 1 LED (24 V DC, green), 1 LED (24 V DC, red)
Storage temperature	-20...+50°C
Notice	In-wall temperature probes are customized products and non-returnable.

General Technical Data p.97

Humidity Transducers

Our humidity transducers record the relative air humidity via a digital sensor and convert the measured value into an analogue 0-10 V or 4-20 mA output signal.

Changeover contact

The measuring devices can be expanded with a potential-free changeover contact, the switching threshold of which is determined via a potentiometer.

Offset potentiometer

A manual fine calibration of the humidity is possible during ongoing operation with an offset potentiometer. The characteristic curve is shifted to the original one.

Display

The optional backlit LCD display is used to display actual values, min/max values, switching thresholds, relay states, and can be rotated every 90° using the menu.

Device settings

The min/max interval, the relay switching hysteresis, various display options (brightness, contrast, display mode) etc. can be set in the device configuration via the display menu.

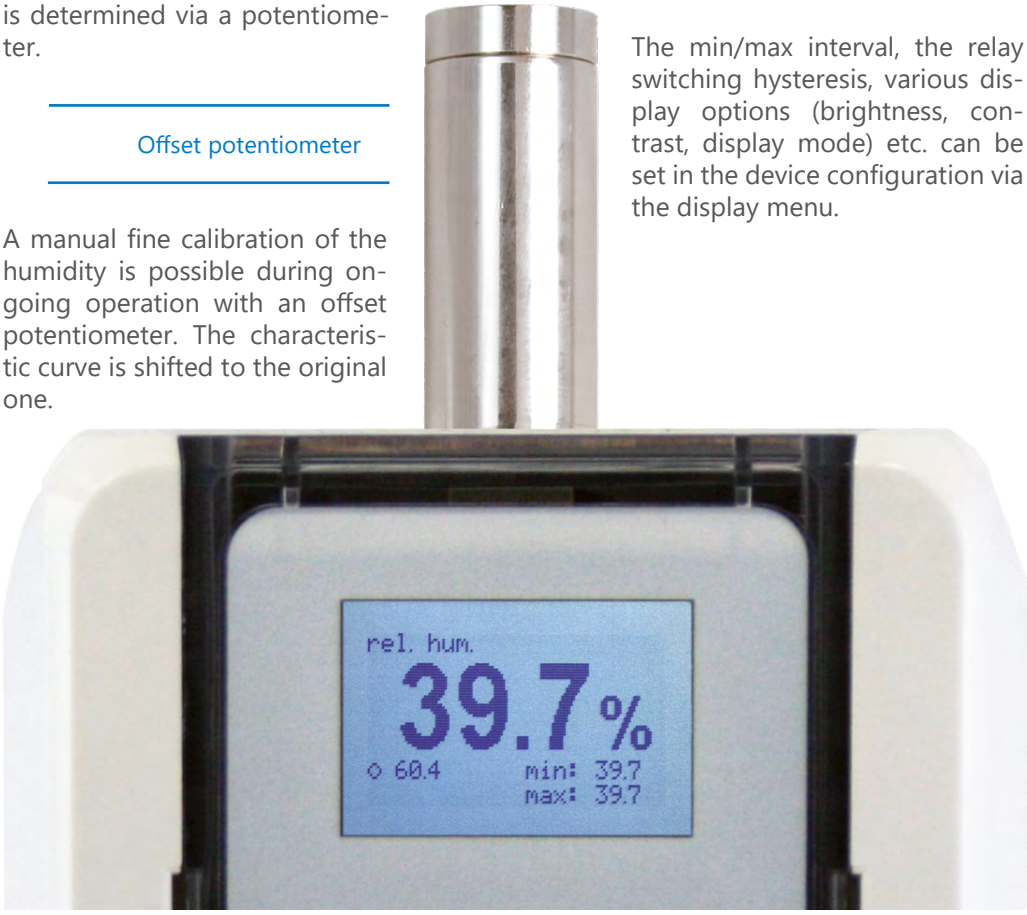

Heating function

The sensor element is reliably protected from condensation by an automatic heating function when the relative humidity hits the 95-99% range.

Easy assembly

Housings with innovative hinge locking technology (→page 32), sufficient terminal space, labelled circuit boards, and connection-friendly wire rope clamps offer maximum ease of installation and speed.

Best quality

With high-quality components, modern serial production, automated testing/calibration setups, and a 100% final inspection, you will be getting a product with the „Made in Germany" guarantee of quality.

MADE IN GERMANY

RoHS COMPLIANT

General Technical Data	
Measurement range r.H.	0-100% r.H.
Temperature dependency	±0,02% r.H. / K (voltage output), ±0,04% r.H. / K (current output)
Long term stability	±1%/year
Sensor	capacitive humidity sensor
Supply voltage analog 0-10 V	24 V AC/DC (±5%)
Supply voltage analog 4-20 mA	15...36 V DC (Ubmin = 15 V + RLoad*0,02A)
Current consumption at 0-10 V	typ. 10 mA, 30 mA peak current consumption for 50 ms at switching moment at option relay
Current consumption at 4-20 mA	max. 20 mA / output, 40 mA peak current consumption for 50 ms at switching moment at option relay
Analogue output 0-10 V	3-wire connection, load current < 0,1 mA
Analogue output 4-20 mA	2-wire connection (transmitter), max. RLoad(Ohm) = (+Ub - 15 V) / 0,02 A
Alarm output	1 x potential-free change-over contact, 48 V, 1 A
Switching Hysteresis Relay	2% of the selected scaling (without display), 0,5...5% of the selected scaling adjustable (with display)
Electrical connection	screw terminals max. 1,5 mm²
Protection class	III
Working range r.H.	0...98% r.H. in contaminant-free, non-condensing air
Storage temperature	-20...+50°C
Approvals	CE, EAC, RoHS

Changer | 0-10 V | 4-20 mA

RAF/A

Humidity transducer

Measurand: rel. humidity
Output: 0-10 V, 4-20 mA, Relay
Highlights: heating function for condensation protection

Dimensional Drawing: p.346 #074 | Connection Drawing: p.300 #020 | Price Table: p.448

Accuracy	±3% r.H. (30%...70% r.H., else ±5% r.H. at 20°C)
Sensor protection	screwable stainless steel sinter filter, condensation protection by heating function in the range of 95...99% r.H.
Flow rate	< 2 m/s
Cable gland	PG11 high-strength cable gland with strain relief
Material	Protection tube: stainless steel V2A
Protection type	Housing/electronic: IP65, Sensor: IP30
Working temperature	Probe: -20...+80°C, Electronic: -20...+70°C

General Technical Data p.105

Changer | 0-10 V | 4-20 mA

RAF(H)/A

Humidity transducer, high precision with calibration certificate

Measurand: rel. humidity
Output: 0-10 V, 4-20 mA, Relay
Highlights: high precision, Windustrial calibration certificate with reference to national standard

Dimensional Drawing: p.346 #075 | Connection Drawing: p.300 #020 | Price Table: p.448

Accuracy	±2% r.H. (30%...70% r.H., else ±3% r.H. at 20°C)
Sensor protection	screwable stainless steel sinter filter, condensation protection by heating function in the range of 95...99% r.H.
Flow rate	< 2 m/s
Cable gland	PG11 high-strength cable gland with strain relief
Material	Protection tube: stainless steel V2A
Protection type	Housing/electronic: IP65, Sensor: IP30
Working temperature	Probe: -20...+80°C, Electronic: -20...+70°C
Certificate	industrial calibration certificate with reference to national standard

General Technical Data p.105

Changer | 0-10 V | 4-20 mA

RKF/A

Humidity transducer for ducts

Measurand: rel. humidity
Output: 0-10 V, 4-20 mA, Relay
Highlights: easy to install with included mounting flange

Dimensional Drawing: p.347 #076 | Connection Drawing: p.300 #020 | Price Table: p.455

Accuracy	±3% r.H. (30%...70% r.H., else ±5% r.H. at 20°C)
Sensor protection	screwable stainless steel sinter filter, condensation protection by heating function in the range of 95...99% r.H.
Flow rate	< 2 m/s
Cable gland	PG11 high-strength cable gland with strain relief
Material	Protection tube: stainless steel V2A
Protection type	Housing/electronic: IP65, Sensor: IP30
Working temperature	Probe: -20...+80°C, Electronic: -20...+70°C

General Technical Data p.105

Changer | 0-10 V | 4-20 mA

RKF(H)/A

Humidity transducer for ducts, high precision with calibration certificate

Measurand: rel. humidity
Output: 0-10 V, 4-20 mA, Relay
Highlights: high precision, Windustrial calibration certificate with reference to national standard

Dimensional Drawing: p.347 #077 | Connection Drawing: p.300 #020 | Price Table: p.454

Accuracy	±2% r.H. (30%...70% r.H., else ±3% r.H. at 20°C)
Sensor protection	screwable stainless steel sinter filter, condensation protection by heating function in the range of 95...99% r.H.
Flow rate	< 2 m/s
Cable gland	PG11 high-strength cable gland with strain relief
Material	Protection tube: stainless steel V2A
Protection type	Housing/electronic: IP65, Sensor: IP30
Working temperature	Probe: -20...+80°C, Electronic: -20...+70°C
Certificate	industrial calibration certificate with reference to national standard

General Technical Data p.105

Changer | 0-10 V | 4-20 mA

RRF/A

Humidity transducer for indoors

Measurand: rel. humidity
Output: 0-10 V, 4-20 mA, Relay
Highlights: modern housing design, on-wall or on flush-mounted box

Dimensional Drawing: p.333 #034 | Connection Drawing: p.300 #021 | Price Table: p.458

Accuracy	±3% r.H. (30%...70% r.H., else ±5% r.H. at 20°C)
Sensor protection	mounted inside housing, condensation protection by heating function in the range of 95...99% r.H.
Cable gland	on the back or housing side (predetermined breaking point)
Protection type	IP30, IP20 (with display)
Working temperature	0...+50°C

General Technical Data p.105

Changer | 0-10 V | 4-20 mA

RRF(P)/A

Humidity transducer with pendulum sensor

Measurand: rel. humidity
Output: 0-10 V, 4-20 mA, Relay
Highlights: pendular probe

Dimensional Drawing: p.347 #078 | Connection Drawing: p.300 #020 | Price Table: p.458

Accuracy	±3% r.H. (30%...70% r.H., else ±5% r.H. at 20°C)
Sensor protection	screwable stainless steel sinter filter, condensation protection by heating function in the range of 95...99% r.H.
Flow rate	< 2 m/s
Cable	2 m PVC cable
Cable gland	PG11 high-strength cable gland with strain relief
Material	Pendulum: brass nickel-plated
Protection type	Housing/electronic: IP65, Sensor: IP30
Working temperature	Probe: -20...+80°C, Electronic: -20...+70°C

General Technical Data p.105

Changer | 0-10 V | 4-20 mA

RDF/A

Humidity transducer for ceiling installation

Measurand: rel. humidity
Output: 0-10 V, 4-20 mA, Relay
Highlights: in the false ceiling by 2 tension springs

Dimensional Drawing: p.348 #080 | Connection Drawing: p.300 #020 | Price Table: p.450

Accuracy	±3% r.H. (30%...70% r.H., else ±5% r.H. at 20°C)
Sensor protection	mounted inside housing, condensation protection by heating function in the range of 95...99% r.H.
Flow rate	< 2 m/s
Cable	1 m PVC cable
Cable gland	PG11 high-strength cable gland with strain relief
Protection type	Housing/electronic: IP65, Sensor: IP30
Working temperature	Probe: -20...+80°C, Electronic: -20...+70°C

General Technical Data p.105

Humidity and Temperature Transducers
permanently heated sensor

Our permanently heated humidity/temperature transducers record the ambient temperature and relative humidity via a digital sensor and convert the measured value into an analogue 0-10 V or 4-20 mA output signal. In addition, a further thermodynamic variable, such as the mixing ratio, absolute humidity, dew point, or wet bulb temperature can be read at output 3.

Constant heating function

The measuring devices have a constant heating function, with which the digital humidity and temperature sensor element is heated approx. 3K above the ambient temperature. The „true“ relative humidity is calculated and output from the relative humidity measured at this excess temperature, the chip temperature of the sensor, and the ambient temperature (temperature measuring element in the second probe).

Highly humid/light harmful gases

This makes the sensor particularly suitable for use in high humidity in the 95 to 99% range or in environments with slight levels of pollutants (ammonia, chlorine).
In addition, a significantly faster reaction speed with changes in the relative humidity, also in the range above 95% RH, is achieved.

Changeover contact

The measuring devices can be expanded with a potential-free changeover contact, the switching threshold of which is determined via a potentiometer. The relay output can be defined for humidity, temperature, or output 3 (calculated measured variable).

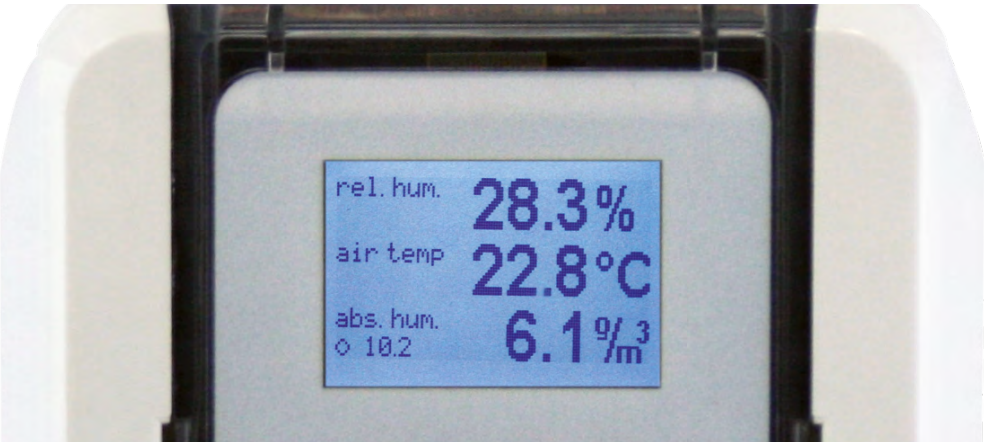

DIP switch technology

Various temperature scales, relay functions, and calculated measured variables (dew point, absolute humidity, mixing ratio, wet bulb temperature) can be configured as a linear output signal using the DIP switch on the device board.

Offset potentiometer

A manual fine calibration of the humidity and temperature is possible during ongoing operation with an offset potentiometer. The characteristic curve is shifted to the original one.

Display

The optional backlit LCD display is used to display actual values, min/max values, switching thresholds, relay states, and can be rotated every 90° using the menu.

Freely programmable scaling

For one of the calculated measured variables, a scaling can be defined in the device settings, which is output as a linear signal at output 3.

Device settings

The min/max interval, the relay switching hysteresis, various display options (brightness, contrast, display mode) etc. can be set in the device configuration via the display menu.

Easy assembly

Housings with innovative hinge locking technology (→page 32), sufficient terminal space, labelled circuit boards, and connection-friendly wire rope clamps offer maximum ease of installation and speed.

Best quality

With high-quality components, modern serial production, automated testing/calibration setups, and a 100% final inspection, you will be getting a product with the „Made in Germany" guarantee of quality.

Changer | 0-10 V | 4-20 mA

FS3110

Humidity transmitter on-wall, continuous heated sensor, active output (0-10 V or 4-20 mA)

Measurand: temperature, dew point temperature, wet bulb temperature, humidity rel., abs. humidity, mixing ratio

Output: 3 x 0-10 V, 3 x 4-20 mA, Relay

Highlights: continuous heated sensor, especially for high humidity areas, aggressive media (chlorine, ammonia)

Dimensional Drawing: S.348 #081 | Connection Drawing: S.301 #022 | Price Table: S.420

Changer | 0-10 V | 4-20 mA

FS3130

Humidity transmitter duct, continuous heated sensor, active output (0-10 V or 4-20 mA)

Measurand: temperature, dew point temperature, wet bulb temperature, humidity rel., abs. humidity, mixing ratio

Output: 3 x 0-10 V, 3 x 4-20 mA, Relay

Highlights: continuous heated sensor, especially for high humidity areas, aggressive media (chlorine, ammonia)

Dimensional Drawing: S.347 #077 | Connection Drawing: S.301 #022 | Price Table: S.420

Technical Data	
Measurement range r.H.	0-100% r.H.
Measurement range abs. humidity	0-20 g/m³, 0-25 g/m³ (calculated) selectable by DIP switch
Measurement range air fuel ratio	0-20 g/kg, 0-25 g/kg (calculated) selectable by DIP switch
Measurement range dew point	-20...+50°C DP, 0...+50°C DP (calculated) selectable by DIP switch
Measurement range wet bulb	-30...+30°C, -20...+50°C (calculated)
Measurement range temp.	-20...+80°C
Scales	-30...+70°C, -20...+80°C, 0...+50°C, 0...+100°C selectable by DIP switch
Accuracy humidity	±3% r.H. (30-70% r.H., else ±5% r.H., at 20°C)
Accuracy temperature	±0,5 K
Temperature dependency	±0,02% r.H. / K (voltage output), ±0,04% r.H. / K (current version), ±0,05°C / 10 K (voltage version), ±0,07°C / 10 K (current output)
Long term stability	±1%/year
Sensor	Combined electronic humidity and temperature sensor
Sensor protection	screwable stainless steel sintered filter, condensation protection by continuous heating approx. 3 K above ambient temperature
Flow rate	< 2 m/s
Supply voltage	24 V AC/DC (±5%)
Current consumption at 0-10 V	typ. 50 mA
Current consumption at 4-20 mA	typ. 50 mA + max. 20 mA / output
Analogue output 0-10 V	3-wire connection, load current < 0,1 mA, min. load resistance 100 kOhm
Analogue output 4-20 mA	3-wire connection, max. RLoad(Ohm) = (+Ub - 15 V) / 0,02 A
Alarm output	1 x potential-free change-over contact, 48 V, 1 A
Switching Hysteresis Relay	2% of the selected scaling (without display), 0,5...5% of the selected scaling adjustable (with display)
Electrical connection	screw terminals max. 1,5 mm²
Cable gland	PG11 high-strength cable gland with strain relief
Material	Protection tube: stainless steel V2A
Protection type	Housing/electronic: IP65, Sensor: IP30
Protection class	III
Working range r.H.	0...99% r.H., non-condensing air, slight pollutant concentration
Working temperature	-20...+70°C, -20...+50°C (Display)
Storage temperature	-20...+50°C
Approvals	CE, EAC, RoHS

Humidity and Temperature Transducers

Our humidity/temperature transducers record the ambient temperature and relative humidity via a digital sensor and convert the measured value into an analogue 0-10 V or 4-20 mA output signal.

Changeover contact

The measuring devices can be expanded with a potential-free changeover contact, the switching threshold of which is determined via a potentiometer. The relay output can be defined for humidity or temperature.

DIP switch technology

Various temperature scales, relay functions, and calculated measured variables (dew point, absolute humidity, mixing ratio, wet bulb temperature) can be configured as a linear output signal using the DIP switch on the device board.

Offset potentiometer

A manual fine calibration of the humidity and temperature is possible during ongoing operation with an offset potentiometer. The characteristic curve is shifted to the original one.

Display

The optional backlit LCD display is used to display actual values, min/max values, switching thresholds, relay states, and can be rotated every 90° using the menu.

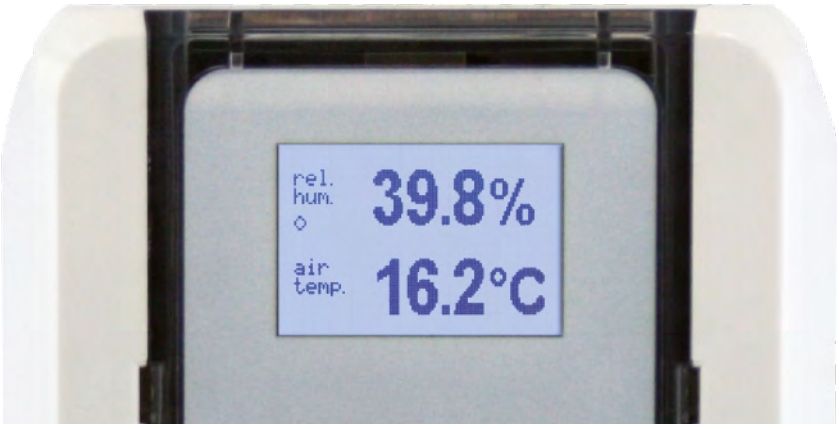

Device settings

The min/max interval, the relay switching hysteresis, various display options (brightness, contrast, display mode) etc. can be set in the device configuration via the display menu.

MADE IN GERMANY

Heating function

The sensor element is reliably protected from condensation by an automatic heating function when the relative humidity hits the 95-99% range. Alternatively, it can always be heated when deployed in harsh environments.

Best quality

With high-quality components, modern serial production, automated testing/calibration setups, and a 100% final inspection, you will be getting a product with the „Made in Germany" guarantee of quality.

Easy assembly

Housings with innovative hinge locking technology (→page 32), sufficient terminal space, labelled circuit boards, and connection-friendly wire rope clamps offer maximum ease of installation and speed.

EAC CE RoHS COMPLIANT DEKRA

General Technical Data	
Measurement range r.H.	0-100% r.H.
Long term stability	±1%/year
Supply voltage analog 0-10 V	24 V AC/DC (±5%)
Supply voltage analog 4-20 mA	15...36 V DC (Ubmin = 15 V + RLoad*0,02A)
Analogue output 0-10 V	3-wire connection, load current < 0,1 mA
Analogue output 4-20 mA	2-wire connection (transmitter), max. RLoad(Ohm) = (+Ub - 15 V) / 0,02 A
Alarm output	1 x potential-free change-over contact, 48 V, 1 A
Electrical connection	screw terminals max. 1,5 mm^2
Protection class	III
Working range r.H.	0...98% r.H. in contaminant-free, non-condensing air
Storage temperature	-20...+50°C
Approvals	CE, EAC, RoHS

Changer | 0-10 V | 4-20 mA

RAFT/A

Humidity / temperature transducer

Measurand: temperature, dew point temperature, rel. humidity, abs. humidity, mixing ratio

Output: 2 x 0-10 V, 2 x 4-20 mA, Relay

Highlights: heating function for condensation protection, easy-to-install surface-mounted housing

Dimensional Drawing: p.346 #074 | Connection Drawing: p.301 #023 | Price Table: p.449

Measurement range abs. humidity	0-50 g/m³, 0-80 g/m³ (calculated) selectable by DIP switch
Measurement range air fuel ratio	0-50 g/kg, 0-80 g/kg (calculated) selectable by DIP switch
Measurement range dew point	-20...+50°C DP, -20...+80°C DP, 0...+50°C DP (calculated) selectable by DIP switch
Measurement range temp.	-20...+80°C
Scales	-30...+70°C, -20...+80°C, 0...+50°C, 0...+100°C selectable by DIP switch
Accuracy humidity	±3% r.H. (30-70% r.H., else ±5% r.H., at 20°C)
Accuracy temperature	±0,5 K
Temperature dependency	±0,02% r.H. / K (voltage output), ±0,04% r.H. / K (current version); ±0,05°C / 10 K (voltage version), ±0,07°C / 10 K (current output)
Sensor	Combined electronic humidity and temperature sensor
Sensor protection	screwable stainless steel sinter filter, condensation protection by heating function in the range of 95...99% r.H.
Flow rate	< 2 m/s
Current consumption at 0-10 V	typ. 10 mA, 30 mA peak current consumption for 50 ms at switching moment at option relay
Current consumption at 4-20 mA	max. 20 mA / output, 40 mA peak current consumption for 50 ms at switching moment at option relay
Switching Hysteresis Relay	2% of the selected scaling (without display), 0,5...5% of the selected scaling adjustable (with display)
Cable gland	PG11 high-strength cable gland with strain relief
Material	Protection tube: stainless steel V2A
Protection type	Housing/electronic: IP65, Sensor: IP30
Working temperature	Probe: -20...+80°C, Electronic: -20...+70°C

General Technical Data p.115

Changer | 0-10 V | 4-20 mA

FS3101

Humidity / temperature transducer, protection tube 190mm

Measurand: temperature, dew point temperature, rel. humidity, abs. humidity, mixing ratio

Output: 2 x 0-10 V, 2 x 4-20 mA, Relay

Highlights: heating function for condensation protection, 190mm protective tube, easy-to-install surface-mounted housing

Dimensional Drawing: p.372 #152 | Connection Drawing: p.301 #023 | Price Table: p.420

Measurement range abs. humidity	0-50 g/m³, 0-80 g/m³ (calculated) selectable by DIP switch
Measurement range air fuel ratio	0-50 g/kg, 0-80 g/kg (calculated) selectable by DIP switch
Measurement range dew point	-20...+50°C DP, -20...+80°C DP, 0...+50°C DP (calculated) selectable by DIP switch
Measurement range temp.	-20...+80°C
Scales	-30...+70°C, -20...+80°C, 0...+50°C, 0...+100°C selectable by DIP switch
Accuracy humidity	±3% r.H. (30-70% r.H., else ±5% r.H., at 20°C); Version C: ±2% r.H. (30-70% r.H., else ±3% r.H. at 20°C)
Accuracy temperature	±0,5 K; Version C: ±0,3 K (10...40°C, else ±0,5 K)
Temperature dependency	±0,02% r.H. / K (voltage output), ±0,04% r.H. / K (current version); ±0,05°C / 10 K (voltage version), ±0,07°C / 10 K (current output)
Sensor	Combined electronic humidity and temperature sensor
Sensor protection	screwable stainless steel sinter filter, condensation protection by heating function in the range of 95...99% r.H.
Flow rate	< 2 m/s
Current consumption at 0-10 V	typ. 10 mA, 30 mA peak current consumption for 50 ms at switching moment at option relay
Current consumption at 4-20 mA	max. 20 mA / output, 40 mA peak current consumption for 50 ms at switching moment at option relay
Switching Hysteresis Relay	2% of the selected scaling (without display), 0,5...5% of the selected scaling adjustable (with display)
Cable gland	PG11 high-strength cable gland with strain relief
Material	Protection tube: stainless steel V2A
Protection type	Housing/electronic: IP65, Sensor: IP30
Working temperature	Probe: -20...+80°C, Electronic: -20...+70°C

General Technical Data p.115

Changer | 0-10 V | 4-20 mA

RAFT(H)/A

Humidity / temperature transducer, high precision with calibration certificate

Measurand: temperature, dew point temperature, rel. humidity, abs. humidity, mixing ratio

Output: 2 x 0-10 V, 2 x 4-20 mA, Relay

Highlights: high precision, Windustrial calibration certificate with reference to national standard

Dimensional Drawing: p.346 #075 | Connection Drawing: p.301 #023 | Price Table: p.449

Measurement range abs. humidity	0-50 g/m³, 0-80 g/m³ (calculated) selectable by DIP switch
Measurement range air fuel ratio	0-50 g/kg, 0-80 g/kg (calculated) selectable by DIP switch
Measurement range dew point	-20...+50°C DP, -20...+80°C DP, 0...+50°C DP (calculated) selectable by DIP switch
Measurement range temp.	-20...+80°C
Scales	-30...+70°C, -20...+80°C, 0...+50°C, 0...+100°C selectable by DIP switch
Accuracy humidity	±2% r.H. (30-70% r.H., else ±3% r.H. at 20°C)
Accuracy temperature	±0,3 K (10...40°C, else ±0,5 K),
Temperature dependency	±0,02% r.H. / K (voltage output), ±0,04% r.H. / K (current version); ±0,05°C / 10 K (voltage version), ±0,07°C / 10 K (current output)
Sensor	Combined electronic humidity and temperature sensor
Sensor protection	screwable stainless steel sinter filter, condensation protection by heating function in the range of 95...99% r.H.
Flow rate	< 2 m/s
Current consumption at 0-10 V	typ. 10 mA, 30 mA peak current consumption for 50 ms at switching moment at option relay
Current consumption at 4-20 mA	max. 20 mA / output, 40 mA peak current consumption for 50 ms at switching moment at option relay
Switching Hysteresis Relay	2% of the selected scaling (without display), 0,5...5% of the selected scaling adjustable (with display)
Cable gland	PG11 high-strength cable gland with strain relief
Material	Protection tube: stainless steel V2A
Protection type	Housing/electronic: IP65, Sensor: IP30
Working temperature	Probe: -20...+80°C, Electronic: -20...+70°C
Certificate	industrial calibration certificate with reference to national standard

General Technical Data p.115

Changer | 0-10 V | 4-20 mA

RAFTP/A

Humidity transducer with passive temperature output

Measurand: temperature, rel. humidity
Output: 0-10 V, 4-20 mA, Relay, passive sensor
Highlights: heating function for condensation protection, easy-to-install surface-mounted housing

Dimensional Drawing: p.346 #074 | Connection Drawing: p.301 #024 | Price Table: p.449

Measurement range temp.	-20...+80°C
Accuracy humidity	±3% r.H. (30-70% r.H., else ±5% r.H., at 20°C)
Temperature dependency	±0,02% r.H. / K (voltage output), ±0,04% r.H. / K (current output)
Sensor	capacitive humidity sensor; Pt100, Pt500, Pt1000, Ni1000, KTY, NTC, LM235Z (other on request)
Sensor protection	screwable stainless steel sinter filter, condensation protection by heating function in the range of 95...99% r.H.
Flow rate	< 2 m/s
Current consumption at 0-10 V	typ. 10 mA, 30 mA peak current consumption for 50 ms at switching moment at option relay
Current consumption at 4-20 mA	max. 20 mA / output, 40 mA peak current consumption for 50 ms at switching moment at option relay
Switching Hysteresis Relay	2% of the selected scaling (without display), 0,5...5% of the selected scaling adjustable (with display)
Cable gland	PG11 high-strength cable gland with strain relief
Material	Protection tube: stainless steel V2A
Protection type	Housing/electronic: IP65, Sensor: IP30
Working temperature	Probe: -20...+80°C, Electronic: -20...+70°C

General Technical Data p.115

Changer | 0-10 V | 4-20 mA

RKFT/A

Humidity / temperature transducer for ducts

Measurand: temperature, dew point temperature, rel. humidity, abs. humidity, mixing ratio

Output: 2 x 0-10 V, 2 x 4-20 mA, Relay

Highlights: easy to install with included mounting flange

Dimensional Drawing: p.347 #076 | Connection Drawing: p.301 #023 | Price Table: p.456

Measurement range abs. humidity	0-50 g/m³, 0-80 g/m³ (calculated) selectable by DIP switch
Measurement range air fuel ratio	0-50 g/kg, 0-80 g/kg (calculated) selectable by DIP switch
Measurement range dew point	-20...+50°C DP, -20...+80°C DP, 0...+50°C DP (calculated) selectable by DIP switch
Measurement range temp.	-20...+80°C
Scales	-30...+70°C, -20...+80°C, 0...+50°C, 0...+100°C selectable by DIP switch
Accuracy humidity	±3% r.H. (30-70% r.H., else ±5% r.H., at 20°C)
Accuracy temperature	±0,5 K
Temperature dependency	±0,02% r.H. / K (voltage output), ±0,04% r.H. / K (current version); ±0,05°C / 10 K (voltage version), ±0,07°C / 10 K (current output)
Sensor	Combined electronic humidity and temperature sensor
Sensor protection	screwable stainless steel sinter filter, condensation protection by heating function in the range of 95...99% r.H.
Flow rate	< 2 m/s
Current consumption at 0-10 V	typ. 10 mA, 30 mA peak current consumption for 50 ms at switching moment at option relay
Current consumption at 4-20 mA	max. 20 mA / output, 40 mA peak current consumption for 50 ms at switching moment at option relay
Switching Hysteresis Relay	2% of the selected scaling (without display), 0,5...5% of the selected scaling adjustable (with display)
Cable gland	PG11 high-strength cable gland with strain relief
Material	Protection tube: stainless steel V2A
Protection type	Housing/electronic: IP65, Sensor: IP30
Working temperature	Probe: -20...+80°C, Electronic: -20...+70°C

General Technical Data p.115

Changer | 0-10 V | 4-20 mA

RKFT(H)/A

Humidity / temperature transducer for air ducts, high precision with calibration certificate

Measurand: temperature, dew point temperature, rel. humidity, abs. humidity, mixing ratio

Output: 2 x 0-10 V, 2 x 4-20 mA, Relay

Highlights: high precision, Windustrial calibration certificate with reference to national standard

Dimensional Drawing: p.347 #077 | Connection Drawing: p.301 #023 | Price Table: p.455

Measurement range abs. humidity	0-50 g/m³, 0-80 g/m³ (calculated) selectable by DIP switch
Measurement range air fuel ratio	0-50 g/kg, 0-80 g/kg (calculated) selectable by DIP switch
Measurement range dew point	-20...+50°C DP, -20...+80°C DP, 0...+50°C DP (calculated) selectable by DIP switch
Measurement range temp.	-20...+80°C
Scales	-30...+70°C, -20...+80°C, 0...+50°C, 0...+100°C selectable by DIP switch
Accuracy humidity	±2% r.H. (30-70% r.H., else ±3% r.H. at 20°C)
Accuracy temperature	±0,3 K (10...40°C, else ±0,5 K),
Temperature dependency	±0,02% r.H. / K (voltage output), ±0,04% r.H. / K (current version), ±0,05°C / 10 K (voltage version), ±0,07°C / 10 K (current output)
Sensor	Combined electronic humidity and temperature sensor
Sensor protection	screwable stainless steel sinter filter, condensation protection by heating function in the range of 95...99% r.H.
Flow rate	< 2 m/s
Current consumption at 0-10 V	typ. 10 mA, 30 mA peak current consumption for 50 ms at switching moment at option relay
Current consumption at 4-20 mA	max. 20 mA / output, 40 mA peak current consumption for 50 ms at switching moment at option relay
Switching Hysteresis Relay	2% of the selected scaling (without display), 0,5...5% of the selected scaling adjustable (with display)
Cable gland	PG11 high-strength cable gland with strain relief
Material	Protection tube: stainless steel V2A
Protection type	Housing/electronic: IP65, Sensor: IP30
Working temperature	Probe: -20...+80°C, Electronic: -20...+70°C
Certificate	industrial calibration certificate with reference to national standard

General Technical Data p.115

Changer | 0-10 V | 4-20 mA

RKFTP/A

Humidity transducer with passive temperature output for ducts

Measurand: temperature, rel. humidity
Output: 0-10 V, 4-20 mA, Relay, passive sensor
Highlights: easy to install with included mounting flange

Dimensional Drawing: p.347 #076 | Connection Drawing: p.301 #024 | Price Table: p.456

Measurement range temp.	-20...+80°C
Accuracy humidity	±3% r.H. (30-70% r.H., else ±5% r.H., at 20°C)
Temperature dependency	±0,02% r.H. / K (voltage output), ±0,04% r.H. / K (current output)
Sensor	capacitive humidity sensor; Pt100, Pt500, Pt1000, Ni1000, KTY, NTC, LM235Z (other on request)
Sensor protection	screwable stainless steel sinter filter, condensation protection by heating function in the range of 95...99% r.H.
Flow rate	< 2 m/s
Current consumption at 0-10 V	typ. 10 mA, 30 mA peak current consumption for 50 ms at switching moment at option relay
Current consumption at 4-20 mA	max. 20 mA / output, 40 mA peak current consumption for 50 ms at switching moment at option relay
Switching Hysteresis Relay	2% of the selected scaling (without display), 0,5...5% of the selected scaling adjustable (with display)
Cable gland	PG11 high-strength cable gland with strain relief
Material	Protection tube: stainless steel V2A
Protection type	Housing/electronic: IP65, Sensor: IP30
Working temperature	Probe: -20...+80°C, Electronic: -20...+70°C

General Technical Data p.115

Changer | 0-10 V | 4-20 mA

FS3135

Humidity transmitter with screw-in thread, active output (0-10 V or 4-20 mA)

Measurand: temperature, dew point temperature, rel. humidity, abs. humidity, mixing ratio

Output: 2 x 0-10 V, 2 x 4-20 mA, Relay

Highlights: pressure resistance max. 10 bar, G1/2 inch thread

Dimensional Drawing: p.348 #079 | Connection Drawing: p.301 #024 | Price Table: p.421

Measurement range abs. humidity	0-50 g/m³, 0-80 g/m³ (calculated) selectable by DIP switch
Measurement range air fuel ratio	0-50 g/kg, 0-80 g/kg (calculated) selectable by DIP switch
Measurement range dew point	-20...+50°C DP, -20...+80°C DP, 0...+50°C DP (calculated) selectable by DIP switch
Measurement range temp.	-20...+80°C
Scales	-30...+70°C, -20...+80°C, 0...+50°C, 0...+100°C selectable by DIP switch
Accuracy humidity	±3% r.H. (30-70% r.H., else ±5% r.H., at 20°C)
Accuracy temperature	±0,5 K
Temperature dependency	±0,02% r.H. / K (voltage output), ±0,04% r.H. / K (current version); ±0,05°C / 10 K (voltage version), ±0,07°C / 10 K (current output)
Sensor	Combined electronic humidity and temperature sensor
Sensor protection	screwable stainless steel sinter filter, condensation protection by heating function in the range of 95...99% r.H.
Flow rate	< 2 m/s
Current consumption at 0-10 V	typ. 10 mA, 30 mA peak current consumption for 50 ms at switching moment at option relay
Current consumption at 4-20 mA	max. 20 mA / output, 40 mA peak current consumption for 50 ms at switching moment at option relay
Switching Hysteresis Relay	2% of the selected scaling (without display), 0,5...5% of the selected scaling adjustable (with display)
Cable gland	PG11 high-strength cable gland with strain relief
Material	Protection tube: stainless steel V2A
Protection type	Housing/electronic: IP65, Sensor: IP30
Pressure resistance	max. 10 bar
Working temperature	-20...+50°C

General Technical Data p.115

Changer | 0-10 V | 4-20 mA

RRFT/A

Humidity / temperature transducer for indoors

Measurand: temperature, dew point temperature, rel. humidity, abs. humidity, mixing ratio

Output: 2 x 0-10 V, 2 x 4-20 mA, Relay

Highlights: modern housing design, on-wall or on flush-mounted box

Dimensional Drawing: p.333 #034 | Connection Drawing: p.302 #025 | Price Table: p.459

Measurement range abs. humidity	0-50 g/m³, 0-80 g/m³ (calculated) selectable by DIP switch
Measurement range air fuel ratio	0-50 g/kg, 0-80 g/kg (calculated) selectable by DIP switch
Measurement range dew point	-20...+50°C DP, -20...+80°C DP, 0...+50°C DP (calculated) selectable by DIP switch
Measurement range temp.	0...+50°C
Scales	-30...+70°C, -20...+80°C, 0...+50°C, 0...+100°C selectable by DIP switch
Accuracy humidity	±3% r.H. (30-70% r.H., else ±5% r.H., at 20°C)
Accuracy temperature	±0,5 K
Temperature dependency	±0,02% r.H. / K (voltage output), ±0,04% r.H. / K (current version); ±0,05°C / 10 K (voltage version), ±0,07°C / 10 K (current output)
Sensor	Combined electronic humidity and temperature sensor
Sensor protection	mounted inside housing, condensation protection by heating function in the range of 95...99% r.H.
Flow rate	< 2 m/s
Current consumption at 0-10 V	typ. 10 mA, 30 mA peak current consumption for 50 ms at switching moment at option relay
Current consumption at 4-20 mA	max. 20 mA / output, 40 mA peak current consumption for 50 ms at switching moment at option relay
Switching Hysteresis Relay	2% of the selected scaling (without display), 0,5...5% of the selected scaling adjustable (with display)
Cable gland	on the back or housing side (predetermined breaking point)
Protection type	IP30, IP20 (with display)
Working temperature	0...+50°C

General Technical Data p.115

Changer | 0-10 V | 4-20 mA

RRFTP/A

Humidity transducer with passive temperature output for indoors

Measurand: rel. humidity
Output: 0-10 V, 4-20 mA, Relay, passive sensor
Highlights: modern housing design, on-wall or on flush-mounted box

Dimensional Drawing: p.333 #034 | Connection Drawing: p.302 #026 | Price Table: p.460

Measurement range temp.	0...+50°C
Accuracy humidity	±3% r.H. (30-70% r.H., else ±5% r.H., at 20°C)
Temperature dependency	±0,02% r.H. / K (voltage output), ±0,04% r.H. / K (current output)
Sensor	capacitive humidity sensor; Pt100, Pt500, Pt1000, Ni1000, KTY, NTC, LM235Z (other on request)
Sensor protection	mounted inside housing, condensation protection by heating function in the range of 95...99% r.H.
Current consumption at 0-10 V	typ. 10 mA, 30 mA peak current consumption for 50 ms at switching moment at option relay
Current consumption at 4-20 mA	max. 20 mA / output, 40 mA peak current consumption for 50 ms at switching moment at option relay
Switching Hysteresis Relay	2% of the selected scaling (without display), 0,5...5% of the selected scaling adjustable (with display)
Cable gland	on the back or housing side (predetermined breaking point)
Protection type	IP30, IP20 (with display)
Working temperature	0...+50°C

General Technical Data p.115

Changer | 0-10 V | 4-20 mA

RRFT(P)/A

Humidity / temperature transducer for pendulum sensors

Measurand: temperature, dew point temperature, rel. humidity, abs. humidity, mixing ratio

Output: 2 x 0-10 V, 2 x 4-20 mA, Relay

Highlights: pendular probe

Dimensional Drawing: p.347 #078 | Connection Drawing: p.301 #023 | Price Table: p.459

Measurement range abs. humidity	0-50 g/m³, 0-80 g/m³ (calculated) selectable by DIP switch
Measurement range air fuel ratio	0-50 g/kg, 0-80 g/kg (calculated) selectable by DIP switch
Measurement range dew point	-20...+50°C DP, -20...+80°C DP, 0...+50°C DP (calculated) selectable by DIP switch
Measurement range temp.	-20...+80°C
Scales	-30...+70°C, -20...+80°C, 0...+50°C, 0...+100°C selectable by DIP switch
Accuracy humidity	±3% r.H. (30-70% r.H., else ±5% r.H., at 20°C)
Accuracy temperature	±0,5 K
Temperature dependency	±0,02% r.H. / K (voltage output), ±0,04% r.H. / K (current version); ±0,05°C / 10 K (voltage version), ±0,07°C / 10 K (current output)
Sensor	Combined electronic humidity and temperature sensor
Sensor protection	screwable stainless steel sinter filter, condensation protection by heating function in the range of 95...99% r.H.
Flow rate	< 2 m/s
Current consumption at 0-10 V	typ. 10 mA, 30 mA peak current consumption for 50 ms at switching moment at option relay
Current consumption at 4-20 mA	max. 20 mA / output, 40 mA peak current consumption for 50 ms at switching moment at option relay
Switching Hysteresis Relay	Temperature: 2K (without display), 0,5...5K adjustable (with display); Other measuring sizes: 2% of the selected scaling (without display), 0,5...5% of the selected scaling adjustable (with display)
Cable	2 m PVC cable
Cable gland	PG11 high-strength cable gland with strain relief
Material	Pendulum: brass nickel-plated
Protection type	Housing/electronic: IP65, Sensor: IP30
Working temperature	Probe: -20...+80°C, Electronic: -20...+70°C

General Technical Data p.115

Changer | 0-10 V | 4-20 mA

RRFTP(P)/A

Humidity transducer with passive temperature output and pendulum sensors

Measurand: temperature, rel. humidity
Output: 0-10 V, 4-20 mA, Relay, passive sensor
Highlights: pendular probe

Dimensional Drawing: p.347 #078 | Connection Drawing: p.301 #024 | Price Table: p.460

Measurement range temp.	-20...+80°C
Accuracy humidity	±3% r.H. (30-70% r.H., else ±5% r.H., at 20°C)
Temperature dependency	±0,02% r.H. / K (voltage output), ±0,04% r.H. / K (current output)
Sensor	capacitive humidity sensor; Pt100, Pt500, Pt1000, Ni1000, KTY, NTC, LM235Z (other on request)
Sensor protection	screwable stainless steel sinter filter, condensation protection by heating function in the range of 95...99% r.H.
Flow rate	< 2 m/s
Current consumption at 0-10 V	typ. 10 mA, 30 mA peak current consumption for 50 ms at switching moment at option relay
Current consumption at 4-20 mA	max. 20 mA / output, 40 mA peak current consumption for 50 ms at switching moment at option relay
Switching Hysteresis Relay	2% of the selected scaling (without display), 0,5...5% of the selected scaling adjustable (with display)
Cable	2 m PVC cable
Cable gland	PG11 high-strength cable gland with strain relief
Material	Pendulum: brass nickel-plated
Protection type	Housing/electronic: IP65, Sensor: IP30
Working temperature	Probe: -20...+80°C, Electronic: -20...+70°C

General Technical Data p.115

Changer | 0-10 V | 4-20 mA

RDFT/A

Humidity / temperature transducer for ceiling installation

Measurand: temperature, dew point temperature, rel. humidity, abs. humidity, mixing ratio

Output: 2 x 0-10 V, 2 x 4-20 mA, Relay

Highlights: heating function for condensation protection, easy-to-install surface-mounted housing

Dimensional Drawing: p.348 #080 | Connection Drawing: p.301 #023 | Price Table: p.451

Measurement range abs. humidity	0-50 g/m³, 0-80 g/m³ (calculated) selectable by DIP switch
Measurement range air fuel ratio	0-50 g/kg, 0-80 g/kg (calculated) selectable by DIP switch
Measurement range dew point	-20...+50°C DP, -20...+80°C DP, 0...+50°C DP (calculated) selectable by DIP switch
Measurement range temp.	-20...+80°C
Scales	-30...+70°C, -20...+80°C, 0...+50°C, 0...+100°C selectable by DIP switch
Accuracy humidity	±3% r.H. (30-70% r.H., else ±5% r.H., at 20°C)
Accuracy temperature	±0,5 K
Temperature dependency	±0,02% r.H. / K (voltage output), ±0,04% r.H. / K (current version); ±0,05°C / 10 K (voltage version), ±0,07°C / 10 K (current output)
Sensor	Combined electronic humidity and temperature sensor
Sensor protection	mounted inside housing, condensation protection by heating function in the range of 95...99% r.H.
Flow rate	< 2 m/s
Current consumption at 0-10 V	typ. 10 mA, 30 mA peak current consumption for 50 ms at switching moment at option relay
Current consumption at 4-20 mA	max. 20 mA / output, 40 mA peak current consumption for 50 ms at switching moment at option relay
Switching Hysteresis Relay	Temperature: 2K (without display), 0,5...5K adjustable (with display); Other measuring sizes: 2% of the selected scaling (without display), 0,5...5% of the selected scaling adjustable (with display)
Cable	1 m PVC cable
Cable gland	PG11 high-strength cable gland with strain relief
Protection type	Housing/electronic: IP65, Sensor: IP30
Working temperature	Probe: -20...+80°C, Electronic: -20...+70°C

General Technical Data p.115

Changer | 0-10 V | 4-20 mA

TW/A

Dew point controller

Measurand: rel. humidity
Output: 0-10 V, 4-20 mA, Relay
Highlights: clamping band

Dimensional Drawing: p.349 #082 | Connection Drawing: p.302 #027 | Price Table: p.470

Accuracy humidity	±3% r.H. (30-70% r.H., else ±5% r.H., at 20°C)
Sensor protection	sinter filter, sensor mounted inside the contact block
Flow rate	< 2 m/s
Current consumption at 0-10 V	typ. 10 mA
Current consumption at 4-20 mA	max. 20 mA / output
Current consumption at relay	max. 30 mA
Switching Hysteresis Relay	3%
Cable gland	PG11 high-strength cable gland with strain relief
Protection type	Housing/electronic: IP65, Sensor: IP30
Working temperature	0...+50°C

General Technical Data p.115

Hygrostats

Our electronic hygrostats record the relative air humidity via a silicon sensor and switch a changeover contact when a specified switching threshold is exceeded.

Changeover contact

The switching threshold is set using a potentiometer.

Display

The 2-digit LED display shows the actual humidity, the set switching threshold, and flashes when exceeded.

Easy assembly

Housings with innovative hinge locking technology (→page 32), sufficient terminal space, labelled circuit boards, and connection-friendly wire rope clamps offer maximum ease of installation and speed.

Best quality

With high-quality components, modern serial production, automated testing/calibration setups, and a 100% final inspection, you will be getting a product with the „Made in Germany“ guarantee of quality.

General Technical Data	
Measurement range r.H.	0-100% r.H.
Accuracy humidity	±3% r.H. (30-70% r.H., else ±5% r.H., at 20°C)
Long term stability	±1%/year
Sensor protection	screwable stainless steel sinter filter
Flow rate	< 2 m/s
Supply voltage	24 V AC/DC (±5%)
Current consumption	max. 30 mA at 24 V DC
Alarm output	1 x potential-free change-over contact, 48 V, 1 A
Switching Hysteresis Relay	3%
Electrical connection	screw terminals max. 1,5 mm²
Cable gland	PG11 high-strength cable gland with strain relief
Material	Protection tube: stainless steel V2A
Protection type	Housing/electronic: IP65, Sensor: IP30
Protection class	III
Working range r.H.	0...98% r.H. in contaminant-free, non-condensing air
Storage temperature	-20...+50°C
Approvals	CE, EAC, RoHS

Changer

RAF/M

Hygrostat, electronic

Measurand: rel. humidity
Output: Relay
Highlights: easy-to-install surface-mounted housing

Dimensional Drawing: S.346 #074 | Connection Drawing: S.303 #028 | Price Table: S.448

Working temperature	0...+50°C

General Technical Data S.131

Changer

RKF/M

Duct hygrostat, electronic

Measurand: rel. humidity
Output: Relay
Highlights: easy to install with included mounting flange

Dimensional Drawing: S.347 #076 | Connection Drawing: S.303 #028 | Price Table: S.455

Working temperature	Probe: -20...+80°C, Electronic: -20...+70°C

General Technical Data S.131

Pressure Transducers

over-, under-, differential/ air pressure

Our pressure transducers record the over-, under-, or differential pressure or air pressure via a digital sensor and convert the measured value into an analogue 0-10 V or 4-20 mA output signal.

Changeover contact

The measuring devices can be expanded with a potential-free changeover contact, the switching threshold of which is determined via a potentiometer.

DIP switch technology

Various scales, output attenuations, and calculated measured variables (volume flow, barometric air pressure) can be configured as a linear output signal using the DIP switch on the device board.

Offset potentiometer

A manual fine calibration is possible during ongoing operation with an offset potentiometer. The characteristic curve is shifted to the original one.

Manual zero point adjustment

A manual zero point adjustment can be done using a button.

Display

The optional backlit LCD display is used to display actual values, min/max values, switching thresholds, relay states, and can be rotated every 90° using the menu.

Device settings

The min/max interval, the relay switching hysteresis, various display options (brightness, contrast, display mode) etc. can be set in the device configuration via the display menu.

Flow calculation

With the DMU/A, the K-factor, the output unit, the output scaling, and the calculation formula can be configured in the device settings for volume flow calculation.

Barometric pressure

With the AD/A, the altitude above sea level can be configured in the device settings in order to allow the barometric pressure to be calculated.

Easy assembly

Housings with innovative hinge locking technology (→page 32), sufficient terminal space, labelled circuit boards, and connection-friendly wire rope clamps offer maximum ease of installation and speed.

Best quality

With high-quality components, modern serial production, automated testing/calibration setups, and a 100% final inspection, you will be getting a product with the „Made in Germany" guarantee of quality.

General Technical Data	
Medium	air, non-aggressive, non-flammable, non-condensing gases
Linearity inaccuracy	±1,0% final value
Output attentuation	0 s / 1 s / 5 s / 10 s selectable by DIP switch
Supply voltage analog 0-10 V	24 V AC/DC (±5%)
Supply voltage analog 4-20 mA	15...36 V DC (Ubmin = 15 V + RLoad*0,02A)
Current consumption at 0-10 V	typ. 15 mA, 30 mA peak current consumption for 50 ms at switching moment at option relay
Current consumption at 4-20 mA	max. 20 mA / output, 40 mA peak current consumption for 50 ms at switching moment at option relay
Analogue output 0-10 V	3-wire connection, min. load resistance 100 kOhm
Analogue output 4-20 mA	2-wire connection (transmitter), max. RLoad(Ohm) = (+Ub - 15 V) / 0,02 A
Alarm output	1 x potential-free change-over contact, 48 V, 1 A
Switching Hysteresis Relay	2% of the selected scaling (without display), 0,5...5% of the selected scaling adjustable (with display)
Electrical connection	screw terminals max. 1,5 mm^2
Pressure resistance	5-times of measurement range
Protection class	III
Working range r.H.	0...98% r.H. in contaminant-free, non-condensing air
Working temperature	0...+50°C
Storage temperature	0...+50°C
Approvals	CE, EAC, RoHS

Changer | 0-10 V | 4-20 mA

DMU/A

Pressure transducer for pressure difference and volume flow, active output (0-10 V or 4-20 mA)

Measurand: pressure, volume flow
Output: 0-10 V, 4-20 mA, Relay
Highlights: easy-to-install surface-mounted housing, 8 measurement ranges per version

Dimensional Drawing: p.349 #083 | Connection Drawing: p.303 #029 | Price Table: p.391

Pressure type	positive, negative or differential pressure
Measurement range pressure	V1: -500...+500 Pa, V2: -5000...+5000 Pa, V3: -100...+100 Pa
Measurement range volume flow (calculated)	V1: 0-65.000 m^3/h, V2: 0-200.000 m^3/h, V3: 0-30.000 m^3/h
Scales	V1: -100/0...+100, -200/0...+200 Pa, -300/0...+300 Pa, -500/0...+500 Pa; V2: -1000/0...+1000, -2000/0...+2000 Pa, -3000/0...+3000 Pa, -5000/0...+5000 Pa; V3: -25/0...+25, -50/0...+50 Pa, -75/0...+75 Pa, -100/0...+100 Pa;
Accuracy	±3,0% FS (at 20°C)
Temperature dependency	±2,5% FS / 10 K
Long term stability	±1% FS/year
Zero-point adjustment	max. +2% final value
Offset	±5% from the selected scale by 270° potentiometer
Reaction rate	< 1 s, at 5% alteration relating to final value
Sensor protection	mounted inside housing
Running-in time	< 30 s at initial operation because of tempering
Cable gland	PG11 high-strength cable gland with strain relief
Protection type	IP65

General Technical Data p.133

Changer | 0-10 V | 4-20 mA

DMU2/A

Pressure transducer for pressure difference with EMC thread

Measurand: pressure
Output: 0-10 V, 4-20 mA, Relay
Highlights: EMC thread, 8 different scales per device

Dimensional Drawing: p.349 #084 | Connection Drawing: p.303 #029 | Price Table: p.392

Pressure type	positive, negative or differential pressure
Measurement range pressure	V1: -500...+500 Pa, V2: -5000...+5000 Pa, V3: -100...+100 Pa
Scales	V1: -100/0...+100, -200/0...+200 Pa, -300/0...+300 Pa, -500/0...+500 Pa; V2: -1000/0...+1000, -2000/0...+2000 Pa, -3000/0...+3000 Pa, -5000/0...+5000 Pa; V3: -25/0...+25, -50/0...+50 Pa, -75/0...+75 Pa, -100/0...+100 Pa;
Accuracy	±3,0% FS (at 20°C)
Temperature dependency	±2,5% FS / 10 K
Long term stability	±1% FS/year
Zero-point adjustment	max. +2% final value
Offset	±5% from the selected scale by 270° potentiometer
Reaction rate	< 1 s, at 5% alteration relating to final value
Sensor protection	mounted inside housing
Running-in time	< 30 s at initial operation because of tempering
Cable gland	M16x1,5 high-strength cable gland with strain relief and EMC grounding
Protection type	IP65

General Technical Data p.133

Changer | 0-10 V | 4-20 mA

AD/A

Pressure transducer for atmospheric / barometric pressure

Measurand: atm. air pressure, bar. air pressure
Output: 0-10 V, 4-20 mA, Relay
Highlights: enter altitude above sea level for calculation bar. air pressure on the device

Dimensional Drawing: p.350 #085 | Connection Drawing: p.303 #029 | Price Table: p.376

Pressure type	atmospheric air pressure / barometric air pressure (display version only)
Measurement range atm. air pressure	500-1150 mbar, 750-1150 mbar
Accuracy	±5 mbar (at 20°C)
Temperature dependency	1 mbar / 10 K
Offset	max. ±50 mbar
Sensor	Piezoresistive on-chip silicon sensor
Sensor protection	stainless steel sinter filter
Cable gland	PG11 high-strength cable gland with strain relief
Protection type	IP30

General Technical Data p.133

Submersible Pressure Sensor
for general applications

The submersible pressure transmitter has been optimised for simple measuring requirements in level measurement. It offers excellent quality, is cost-effective and reliable. It has been designed to the current demands of the industry and has a 4 ... 20 mA output as standard, an accuracy of 0.5% and PUR cable. With IP 68 ingress protection, it is suitable for permanent level measurement up to 100 m water column.

Robust design

The submersible pressure transmitter features a hermeticallysealed and exceptionally robust stainless steel case. The proven, fully-welded construction ensures a long service life and permanent sealing.

Best quality

With high-quality components, modern serial production, automated testing/calibration setups, and a 100% final inspection, you will be getting a product with the „Made in Germany“ guarantee of quality.

FS3540

Submersible pressure transmitter for level measurement, activ output (4-20mA)

Measurand: relative pressure
Output: 4-20 mA
Highlights: robust, reliable, economical, level measurement in rivers and lakes, level measurement in vessel and storage systems, control of sewage lift and pumping stations

Dimensional Drawing: S.372 #153 | Connection Drawing: S.319 #072 | Price Table: S.421

Measurement range pressure	0...0,25 bar, 0...0,4 bar, 0...0,6 bar, 0...1 bar, 0...1,6 bar, 0...2,5 bar, 0...4 bar, 0...6 bar, 0...10 bar
Accuracy	163/5000 ± 0.5% of the span under reference conditions, including non-linearity, hysteresis, zero point and end value deviation (corresponds to measurement deviation according to IEC 61298-2)
Reference conditions	Temperature 15...25°C; Air pressure 860-1060 mbar; Humidity 45-75% r.h.; Power supply 24 V DC
Repeatability	≤ ± 0.1% of the span
Temperature depen-dency	Average temperature coefficient of the zero point; Measuring ranges ≤ 0.25 bar; ≤ ± 0.4% of the span / 10 K; Measuring ranges> 0.25 bar; ≤ ± 0.2% of the span / 10 K; Average temperature coefficient of the span; ≤ ± 0.2% of the span / 10 K
Linearity inaccuracy	≤ ± 0.2% of the span according to IEC 61298-2
Long term stability	≤ ± 0.2% of the span / year
Sensor	Stainless steel membrane, diving depth up to 100 m
Supply voltage analog 4-20 mA	10...30 V DC
Analogue output 4-20 mA	2-wire connection, max. RLoad(Ohm) = (+Ub - 10 V) / 0,02 A - (cable length in m x 0,14 Ω)
Electrical connection	150/5000 5 m PUR cable, max. Tensile force without strain relief up to 350 N, with strain relief up to 1,000 N, short-circuit strength: S + against U; Reverse polarity protection: U + against U;
Isolation voltage	DC 500 V
Overload pressure limit	2
Burst pressure	2,4
Material	CrNi steel housing; CrNi steel sensor; Protective cap made of PA; PUR cables
Weight	Pegelsonde ca. 180 g; Kabel ca. 80 g/m; Zusatzgewicht (Zubehör) ca. 500 g
Working temperature	-10...+50°C
Ambient temperature	-10...+50°C
Storage temperature	-30...+80°C
Approvals	CE, EAC, CSA, GOST-R

Pressure Switches

FS3610

Our FS3610 pressure switch detects differential pressure in the two inputs via an NBR or EPDM membrane and switches a changeover contact when the specified switching pressure is reached.

Liquids and gases

The FS3610 is especially suitable for liquids and gases (also aggressive ones with an EPDM membrane).

Regulator

The desired switching pressure can be set on the regulating screw using a screwdriver.

Service life

High-quality components guarantee more than 1 million switching cycles.

Switching capacity

The changeover contact offers an electrical switching capacity of max. 1.5 A (0.4 A) / 250 VAC.

Easy assembly

Electrical connections for the 6.3 x 0.8 AMP flat plug per DIN 46244, a Form A device plug per DIN 175301-803, and a mounting bracket maximum freedom and speed of installation.

Best quality

With high-quality components, modern serial production, automated testing/calibration setups, and a 100% final inspection, you will be getting a product with the „Made in Germany" guarantee of quality.

MADE IN GERMANY

DW/H

Our DW/H pressure switch detects the over-, under-, or differential pressure using a silicone membrane via the two inputs and switches a changeover contact when the specified switching pressure is reached.

Gases

The DW/H is especially suitable for use in ambient air and other non-flammable, non-aggressive gases.

Regulator

The switching pressure can be set on the regulator with a guide scale.

Service life

High-quality components guarantee more than 1 million switching cycles.

Switching capacity

The changeover contact offers an electrical switching capacity of max. 1.5 A (0.4 A) / 250 VAC.

Easy assembly

Electrical connections for the 6.3 x 0.8 AMP flat plug per DIN 46244 or plug-in screw terminals and an M20x1.5 cable bushing offer maximum freedom and speed of installation.

Best quality

With high-quality components, modern serial production, automated testing/calibration setups, and a 100% final inspection, you will be getting a product with the „Made in Germany“ guarantee of quality.

General Technical Data	
Pressure type	positive, negative or differential pressure
Durability	more than 1 Mio. switching operations
Electrical breaking capacity	1,5 A at 250V AC (low voltage version < 0,1 A, 24 V DC on request)
Protection type	IP54

FS3610

Differential pressure switch for liquid with adjustable setting

Measurand: pressure
Output: Relay
Highlights: liquid and gaseous – also aggressive, max. 10 bar, with protection cap and mounting bracket

Dimensional Drawing: S.350 #087 | Connection Drawing: S.303 #030 | Price Table: S.422

Medium	liquid and gaseous – also aggressive
Measurement range pressure	40...200 mbar, 150...1000 mbar
Repeatability	±10%
Alarm output	change-over contact, contact rating 6 (1,5) A at 250V AC
Switching Hysteresis Relay	30 mbar (at 40...200 mbar); 100 mbar (at 150...1000 mbar);
Process connection	Inner thread G 1/8 of Brass (CuZn40) for P1+ / P2–
Electrical connection	Tab terminal 6.3 mm x 0.8 mm according to DIN 46244
Pressure resistance	10 bar
Burst pressure	> 20 bar
Cable gland	Connector, Shape A, to EN 175301-803
Material	Membrane: NBR, EPDM (for aggressive media); Media contacting parts: Chrome / Stainless steel / Brass / Diaphragm material
Weight	850 g
Protection class	II
Working temperature	-10...+80°C
Ambient temperature	-10...+80°C
Storage temperature	-40...+80°C
Approvals	CE, RoHS

General Technical Data S.141

DW/H

Pressure Switch for Non-aggressive Gases, mechanical

Measurand: pressure
Output: Relay
Highlights: change-over contact, incl. connecting kit

Dimensional Drawing: S.350 #086 | Connection Drawing: S.303 #030 | Price Table: S.394

Medium	non-aggresive gases
Measurement range pressure	20...200 Pa, 30...400 Pa, 50...500 Pa, 200...1000 Pa, 500...2500 Pa, 1000...5000 Pa (other on request)
Repeatability	±1/2,5/5%, min. ±5 Pa
Electrical connection	flat connection 6.3 x 0.8 DIN 46244 with clamping screws up to 2.5 mm^2
Burst pressure	> 100 mbar
Cable gland	M16x1,5 high-strength cable gland with strain relief
Material	Membrane: silicone, optional NBR (silicone-free)
Working temperature	-30...+80°C
Approvals	CE, EAC, RoHS, EN 60730 approved for 1.5 A, DVGW approval according to DIN 3398 Part 2. EC Type Examination EN 1854

General Technical Data S.141

Pressure Transducers

relative- and absolute pressure

Our pressure transducers record the relative or absolute pressure in gaseous and liquid media via a stainless steel membrane and convert the measured value into an analogue 0-10 V or 4-20 mA output signal.

Many different measuring ranges from 0... 0.5 to 0... 1000 bar are available.

Precision

For optimal measurement results, the sensors are available with a non-linearity of 0.25% or 0.5%.

Service life

High-quality components guarantee more than 1 million switching cycles.

General Technical Data	
Accuracy	±1,0% of range (0,5% BFSL), Option: ±0,5% of range (0,25% BFSL)
Response time (t90)	< 4 ms
Long-term drift	±0,1% FS
Durability	100 million load changes
Sensor	medium sided stainless steel membrane
Supply voltage analog 0-10 V	14...30 V DC
Supply voltage analog 4-20 mA	8...30 V DC
Current consumption at 0-10 V	typ. 8 mA
Current consumption at 4-20 mA	max. 25 mA
Analogue output 0-10 V	3-wire connection (load resistance > 10 kOhm)
Analogue output 4-20 mA	2-wire connection (transmitter), max. RLoad(Ohm) = (+Ub - 8 V) / 0,02 A
Electrical connection	angular connector DIN EN 175301-803 A
Isolation voltage	DC 500 V
Vibration proof	10 g (testing according to IEC 60068-2-6, under resonanc), 20 g on request
Material	stainless steel
Weight	80 g
Protection type	IP65
Protection class	III
Working temperature	-30...+100°C
Ambient temperature	-30...+100°C
Storage temperature	-20...+70°C
Approvals	CE, UL, EAC, GL, RoHS

Easy assembly

Electrical connections for the 6.3 x 0.8 AMP flat plug per DIN 46244, a Form A device plug per DIN 175301-803, and a mounting bracket maximum freedom and speed of installation.

Best quality

With high-quality components, modern serial production, automated testing/calibration setups, and a 100% final inspection, you will be getting a product with the „Made in Germany“ guarantee of quality.

0-10 V | 4-20 mA

DT/D

Pressure transducer for relative pressure

Messgrösse: relative pressure
Ausgang: 0-10 V, 4-20 mA
Besondere Merkmale: stainless steel membrane

Dimensional Drawing: S.351 #088 | Connection Drawing: S.304 #031 | Price Table: S.392

Pressure type	relative pressure
Measurement range pressure	from 0...0,6 up to 0...1000 bar
Overload pressure limit	2
Shock load	testing according to IEC 68-2-32 / 1 m free-fall on a steel plate / 1000 g

General Technical Data S.144

0-10 V | 4-20 mA

ADF/A

Pressure transducer for absolute pressure

Messgrösse: absolute pressure
Ausgang: 0-10 V, 4-20 mA
Besondere Merkmale: thread G1/4 inch

Dimensional Drawing: S.351 #088 | Connection Drawing: S.304 #031 | Price Table: S.376

Pressure type	absolute pressure
Measurement range pressure	0...1 bar abs up to 0...16 bar abs
Shock load	500 g according to IEC 60068-2-27
Measurement range/Overrange limit/Burst pressure	0...1/2/5 bar, 0...1,6/3,2/10 bar, 0...2,5/5/10 bar, 0...4/8/17 bar, 0...6/12/34 bar, 0...10/20/34 bar, 0...16/32/100 bar

General Technical Data S.144

Air Quality

Multi-Sensor-Device

This multi-sensor measuring device measures the CO2/CO concentration, mixed gas VOC, temperature, humidity, and the atmospheric air pressure. The measured values are output for further processing as a linear 0-10 V or 4-20 mA output signal.

Sensors

The CO_2 concentration is measured using a non-dispersive infrared sensor (NDIR), The CO concentration is measured using an electrochemical sensor. the humidity and temperature are measured via a digital sensor.

Changeover contact

The measuring device has a potential-free changeover contact, which can be defined for CO2/CO, VOC, temperature, or humidity. The switching threshold is set with a potentiometer.

Skalierungen

CO2 has 3 different scales: 0-2000 ppm, 0-5000 ppm, 0-10000 ppm.
CO has 3 different CO scales: 0-200 ppm, 0-500 ppm, 0-1000 ppm.
The VOC sensitivity on the device can be set as „low," „medium," and „high."

For the temperature output signal, you can choose between 4 different scaling: -30° to+70°C, -20° to+80°C, 0° to+50 °C, 0°C to+100°C.

Offset potentiometer

A manual fine calibration of the humidity, temperature, and air pressure is possible during ongoing operation with an offset potentiometer during operation. The characteristic curve is shifted to the original one.

Barometric compensation

For a highly accurate CO_2 measurement result, air pressure compensation takes place during the infrared measurement.

Berechnete Messgrössen

Alternatively, the absolute moisture can be measured in g/m^3, the mixing ratio g/kg, or a dew point temperature in °C can be specified as a measurement for the moisture output signal.

Barometric compensation

The air pressure can be defined and output as atmospheric air pressure or by entering the altitude above sea level in the menu as barometric air pressure.

Automatic/manual zero point adjustment

The air quality sensor carries out an automatic CO2/VOC recalibration at regular intervals to ensure stable measurements over the long time.
This autocalibration can also be deactivated and carried out manually using a button on the device.

Display

A 4 inch back-lit graphic LCD display shows all of the measured values. Its user menu is also used to configure the measuring devices.

Device settings

The diagram interval time, height above sea level, the relay switching hysteresis, various display options (brightness, contrast, display mode, smileys), etc. can all be set in the device configuration via the display menu.

Easy assembly

Housings with innovative hinge locking technology (→page 32), sufficient terminal space, labelled circuit boards, and connection-friendly wire rope clamps offer maximum ease of installation and speed.

Best quality

With high-quality components, modern serial production, automated testing/calibration setups, and a 100% final inspection, you will be getting a product with the „Made in Germany“ guarantee of quality.

General Technical Data	
Measurement range atm. air pressure	750-1150 mbar
Measurement range bar. air pressure	750-1150 mbar
Measurement range r.H.	0-100% r.H.
Measurement range abs. humidity	0-50 g/m³, 0-80 g/m³ (calculated) selectable by DIP switch
Measurement range air fuel ratio	0-50 g/kg, 0-80 g/kg (calculated) selectable by DIP switch
Measurement range dew point	-20...+50°C DP, -20...+80°C DP, 0...+50°C DP (calculated) selectable by DIP switch
Measurement range temp.	-30...+70°C, -20...+80°C, 0...+50°C, 0...+100°C selectable by DIP switch
Measurement range VOC	0-100% (good / bad air quality, referring to the calibration gas)
Long term stability	±1% FS/year
Sensor protection	sinter filter, mounted inside housing
Supply voltage	24 V AC/DC (±5%)
Current consumption at 0-10 V	Ø 100 mA
Current consumption at 4-20 mA	ca. 200 mA
Analogue output 0-10 V	3-wire connection
Analogue output 4-20 mA	3-wire connection
Alarm output	1 x potential-free change-over contact, 48 V, 1 A
Switching Hysteresis Relay	2%
Electrical connection	screw terminals max. 1,5 mm²
Cable gland	M16x1,5 high-strength cable gland with strain relief
Protection type	IP65 (housing), IP54 (probe)
Protection class	III
Working range r.H.	0...98% r.H. in contaminant-free, non-condensing air
Working temperature	0...+50°C
Storage temperature	-20...+50°C
Approvals	CE, EAC, RoHS

Changer | 0-10 V | 4-20 mA

CO2-M/A

Multifunctional air quality sensor for CO2, mixed gas VOC, humidity, temperature and atmospheric/barometric air pressure

Measurand: CO2, VOC, humidity, temperature, air pressure
Output: 5 x 0-10 V, 5 x 4-20 mA, Relay
Highlights: The multifunctional air quality transducer - everything at a glance

Dimensional Drawing: S.351 #089 | Connection Drawing: S.304 #032 | Price Table: S.385

Measurement range CO2	0-10000 ppm
Scales	0-2000/5000/10000 ppm
Accuracy	CO2: 0-2000 ppm: ±50 ppm + 2% f. mv, 0-5000 ppm: ±50 ppm + 3% f. mv, 0-10000 ppm: ±100 ppm + 5% f. mv; VOC: ±15% FS; Humidity: ±3% r.H. (30%...70% r.H., else ±5% r.H. at 20°C); Temperature: 0,5 K (at 15...35°C, else ±1 K); all specifications at 20°C, 45% r.h., 1013 mbar, auto-calibration ON;
Temperature dependency	CO2: ±5 ppm / K, Humidity: ±0,04% r.H. / K; Temperature: ±0,1°C / 10 K
Pressure dependency	CO2: air pressure compensated
Sensor	CO2: nondispersive infrared sensor (NDIR); VOC: metal oxide sensor; Humidity/Temperature: capacitive humidity sensor, Air pressure: piezoresistive on-chip silicon sensor
Running-in time	10 min

General Technical Data S.148

Changer | 0-10 V | 4-20 mA

CO-M/A

Multifunctional air quality sensor for CO, mixed gas VOC, humidity, temperature and atmospheric/barometric air pressure

Measurand: CO, VOC, humidity, temperature, air pressure
Output: 5 x 0-10 V, 5 x 4-20 mA, Relay
Highlights: The multifunctional air quality transducer - everything at a glance

Dimensional Drawing: S.351 #089 | Connection Drawing: S.304 #033 | Price Table: S.384

Measurement range CO	0-1000 ppm
Scales	0-200/500/1000 ppm
Accuracy	CO: ±5 ppm + max. ±5% f. mv VOC: ±15% FS; Humidity: ±3% r.H. (30...70% r.H., else ±5% r.H.); Temperature: 0,5 K (15...35°C, else ±1 K); Air pressure: ±5 mbar; all specifications at 20°C, 45% r.H. 1013 mbar, auto-calibration ON;
Temperature dependency	CO: ±5 ppm / K, Humidity: ±0,04% r.H. / K; Temperature: ±0,1°C / 10 K
Sensor	CO: electrochemical sensor; VOC: metal oxide sensor; Humidity/Temperature: capacitive humidity sensor

General Technical Data S.148

Air Quality VOC

Our air quality sensors measure the volatile organic compounds (VOC) and the temperature of the ambient air and convert the measured values into an analogue 0-10 V or 4-20 mA output signal.

Changeover contact

The measuring devices can be expanded with a potential-free changeover contact, the switching threshold of which is determined via a potentiometer. The relay output can be defined for VOC, temperature, both VOC and temperature (on a first-come, first-served basis).

DIP switch technology

VOC sensitivity, relay functions, and calibration guidelines can be configured using the DIP switch on the device board.

Offset potentiometer

A manual fine calibration of the temperature is possible during ongoing operation with an offset potentiometer. The characteristic curve is shifted to the original one.

Automatic/manual zero point adjustment

The air quality sensor carries out an automatic VOC recalibration at regular intervals to ensure stable measurements over the long time.
This autocalibration can also be deactivated and carried out manually using a button on the device.

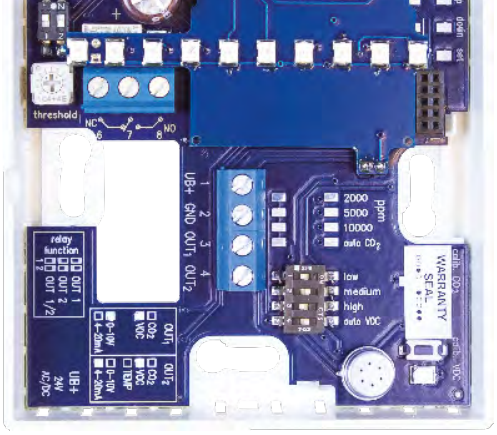

Display

The optional backlit LCD display is used to display actual values, min/max values, switching thresholds, relay states, and can be rotated every 90° using the menu.

Device settings

The min/max interval, the relay switching hysteresis, various display options (brightness, contrast, display mode, smileys) etc. can be set in the device configuration via the display menu.

Easy assembly

Housings with innovative hinge locking technology (→page 32), sufficient terminal space, labelled circuit boards, and connection-friendly wire rope clamps offer maximum ease of installation and speed.

Best quality

With high-quality components, modern serial production, automated testing/calibration setups, and a 100% final inspection, you will be getting a product with the „Made in Germany“ guarantee of quality. many“.

General Technical Data	
Measurement range VOC	0-100% (good / bad air quality, referring to the calibration gas)
Accuracy	±15% FS
Response time (t90)	max. 60 s
Long term stability	< 15% FS/year at norm load
Running-in time	1 h
Supply voltage	24 V AC/DC (±5%)
Current consumption	max. 60 mA
Analogue output 0-10 V	3-wire connection, min. load resistance 100 kOhm
Switching Hysteresis Relay	2% FS (without Display), 0,5...5% FS adjustable (with Display)
Protection class	III
Working range r.H.	0...98% r.H. in contaminant-free, non-condensing air
Working temperature	0...+50°C
Storage temperature	-20...+50°C
Approvals	CE, EAC, RoHS

Changer | 0-10 V | 4-20 mA

KL/A

Duct air quality sensor for mixed gas (VOC)

Measurand: VOC
Output: 0-10 V, 4-20 mA, Relay
Highlights: easy to install with included mounting flange

Dimensional Drawing: p.347 #076 | Connection Drawing: p.305 #034 | Price Table: p.428

Sensor	metal oxide VOC-sensor
Sensor protection	screwable stainless steel sinter filter
Analogue output 4-20 mA	3-wire connection, max. RLoad(Ohm) = (+Ub - 15 V) / 0,02 A
Alarm output	1 x potential-free change-over contact, 48 V, 1 A
Electrical connection	screw terminals max. 1,5 mm²
Cable gland	PG11 high-strength cable gland with strain relief
Material	Protection tube: metal
Weight	250 g
Protection type	Housing/electronic: IP65, Sensor: IP30

General Technical Data p.151

Changer | 0-10 V | 4-20 mA

KLT/A

Duct air quality sensor for mixed gas (VOC) and temperature

Measurand: temperature, VOC
Output: 2 x 0-10 V, 2 x 4-20 mA, Relay
Highlights: easy to install with included mounting flange

Dimensional Drawing: p.347 #076 | Connection Drawing: p.305 #034 | Price Table: p.429

Measurement range temp.	0...+50°C
Sensor	VOC: metal oxide sensor, Temperature: resistance sensor
Sensor protection	screwable stainless steel sinter filter
Analogue output 4-20 mA	3-wire connection, max. RLoad(Ohm) = (+Ub - 15 V) / 0,02 A
Alarm output	1 x potential-free change-over contact, 48 V, 1 A
Electrical connection	screw terminals max. 1,5 mm²
Cable gland	PG11 high-strength cable gland with strain relief
Material	Protection tube: metal
Weight	250 g
Protection type	Housing/electronic: IP65, Sensor: IP30

General Technical Data p.151

Changer | 0-10 V | 4-20 mA

RL/A

Room air quality sensor for mixed gas (VOC)

Measurand: VOC
Output: 0-10 V, 4-20 mA, Relay
Highlights: modern housing design, on-wall or on flush-mounted box

Dimensional Drawing: p.333 #034 | Connection Drawing: p.305 #035 | Price Table: p.457

Sensor	metal oxide VOC-sensor
Sensor protection	mounted inside housing
Analogue output 4-20 mA	3-wire connection, max. RLoad(Ohm) = (+Ub - 15 V) / 0,02 A
Alarm output	1 x potential-free change-over contact, 48 V, 1 A
Electrical connection	screw terminals max. 1,5 mm²
Cable gland	on the back or housing side (predetermined breaking point)
Weight	ca. 70 g
Protection type	IP30, IP20 (with display)

General Technical Data p.151

Changer | 0-10 V | 4-20 mA

RLT/A

Room air quality sensor for mixed gas (VOC) and temperature

Measurand: temperature, VOC
Output: 2 x 0-10 V, 2 x 4-20 mA, Relay
Highlights: modern housing design, on-wall or on flush-mounted box

Dimensional Drawing: p.333 #034 | Connection Drawing: p.305 #036 | Price Table: p.457

Measurement range temp.	0...+50°C
Sensor	VOC: metal oxide sensor, Temperature: resistance sensor
Sensor protection	mounted inside housing
Analogue output 4-20 mA	3-wire connection, max. RLoad(Ohm) = (+Ub - 15 V) / 0,02 A
Alarm output	1 x potential-free change-over contact, 48 V, 1 A
Electrical connection	screw terminals max. 1,5 mm²
Cable gland	on the back or housing side (predetermined breaking point)
Weight	ca. 70 g
Protection type	IP30, IP20 (with display)

General Technical Data p.151

Changer | 0-10 V | 4-20 mA

RL2/A

Room air quality sensor for mixed gas (VOC) with LED display

Measurand: VOC
Output: 0-10 V, 4-20 mA, Relay
Highlights: LED-Display

Dimensional Drawing: p.333 #034 | Connection Drawing: p.306 #037 | Price Table: p.457

Sensor	metal oxide VOC-sensor
Sensor protection	mounted inside housing
Analogue output 4-20 mA	3-wire connection, max. RLoad(Ohm) = (+Ub - 15 V) / 0,02 A
Alarm output	1 x potential-free change-over contact, 48 V, 1 A
Equipment	LED display: 1-3 green (good), 4-7 yellow (average), 8-10 red (bad)
Electrical connection	screw terminals max. 1,5 mm²
Cable gland	on the back or housing side (predetermined breaking point)
Weight	ca. 70 g
Protection type	IP30

General Technical Data p.151

Changer | 0-10 V | 4-20 mA

RLU/A

Flush mounted air quality sensor for mixed gas (VOC)

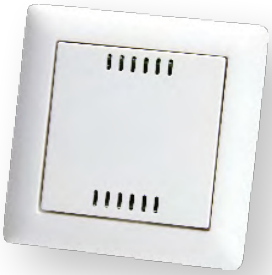

Measurand: VOC
Output: 0-10 V, NOC
Highlights: discrete flush mounting

Dimensional Drawing: p.339 #054 | Connection Drawing: p.306 #038 | Price Table: p.457

Sensor	metal oxide VOC-sensor
Sensor protection	mounted inside housing
Alarm output	potential-free normally open contact, threshold can be defined by 270° potentiometer
Electrical connection	push terminals max. 1,5 mm²
Light switch program	GIRA Standard 55, pure white satin (other on request)
Cable gland	bottom side
Weight	ca. 100 g
Protection type	IP30

General Technical Data p.151

Air Quality CO2

Our air quality sensors measure the CO_2 concentration, volatile organic compounds (VOC), and the temperature of the ambient air and convert the measured values into an analogue 0-10 V or 4-20 mA output signal.

Changeover contact

The measuring devices can be expanded with a potential-free changeover contact, the switching threshold of which is determined via a potentiometer. The relay output can be defined for CO_2, temperature, both CO_2 and temperature (on a first-come, first-served basis).

DIP switch technology

Various CO_2 scales, VOC sensitivity, relay functions, and calibration guidelines can be configured using the DIP switch on the device board.

Offset potentiometer

A manual fine calibration of the temperature is possible during ongoing operation with an offset potentiometer. The characteristic curve is shifted to the original one.

Automatic/manual zero point adjustment

The air quality sensor carries out an automatic CO_2/VOC recalibration at regular intervals to ensure stable measurements over the long time.
This autocalibration can also be deactivated and carried out manually using a button on the device.

MADE IN GERMANY

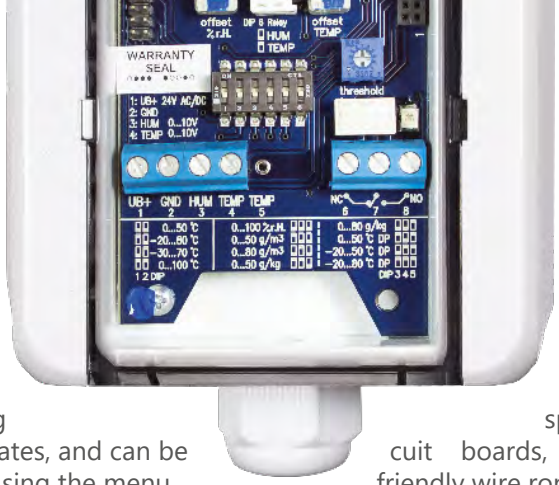

Display

The optional backlit LCD display is used to display actual values, min/max values, switching thresholds, relay states, and can be rotated every 90° using the menu.

Device settings

The min/max interval, the relay switching hysteresis, various display options (brightness, contrast, display mode, smileys) etc. can be set in the device configuration via the display menu.

Easy assembly

Housings with innovative hinge locking technology (→page 32), sufficient terminal space, labelled circuit boards, and connection-friendly wire rope clamps offer maximum ease of installation and speed.

Best quality

With high-quality components, modern serial production, automated testing/calibration setups, and a 100% final inspection, you will be getting a product with the „Made in Germany“ guarantee of quality.

General Technical Data	
Temperature dependency	CO2: ±5 ppm / K
Pressure dependency	CO2: 1,6% f. mv/kPa
Response time (t90)	< 5 min
Long term stability	±1% FS/year
Running-in time	10 min
Current consumption	Ø 100 mA
Analogue output 0-10 V	3-wire connection
Switching Hysteresis Relay	2% FS (without Display), 0,5...5% FS adjustable (with Display)
Electrical connection	screw terminals max. 1,5 mm²
Protection class	III
Working range r.H.	0...98% r.H. in contaminant-free, non-condensing air
Working temperature	0...+50°C
Storage temperature	-20...+50°C
Approvals	CE, EAC, RoHS

Changer | 0-10 V | 4-20 mA

CO2-A/A

CO2 air quality sensor with measurement range switch

Measurand: CO2
Output: 0-10 V, 4-20 mA, Relay
Highlights: sensor protection with sinter filter,easy-to-install

Dimensional Drawing: p.350 #085 | Connection Drawing: p.306 #039 | Price Table: p.384

Measurement range CO2	0-10000 ppm
Scales	0-2000/5000/10000 ppm
Accuracy	0-2000 ppm: ±50 ppm + 2% f. mv, 0-5000 ppm: ±50 ppm + 3% f. mv, else: ±100 ppm + 5% f. mv (at 20°C, 1013 mbar, auto-calibration ON)
Sensor	Nondispersive infrared sensor (NDIR)
Sensor protection	sinter filter
Supply voltage	24 V AC/DC (±5%)
Analogue output 4-20 mA	3-wire connection
Alarm output	1 x potential-free change-over contact, 48 V, 1 A
Cable gland	PG11 high-strength cable gland with strain relief
Protection type	Housing/electronic: IP65, Sensor: IP30

General Technical Data p.157

Changer | 0-10 V | 4-20 mA

CO2T-A/A

CO2 and temperature sensor with measurement range switch

Measurand: temperature, CO2
Output: 2 x 0-10 V, 2 x 4-20 mA, Relay
Highlights: non-dispersive infrared sensor (NDIR)

Dimensional Drawing: p.351 #090 | Connection Drawing: p.307 #040 | Price Table: p.386

Measurement range CO2	0-10000 ppm
Measurement range temp.	0...+50°C
Scales	0-2000/5000/10000 ppm
Accuracy	0-2000 ppm: ±50 ppm + 2% f. mv, 0-5000 ppm: ±50 ppm + 3% f. mv, else: ±100 ppm + 5% f. mv (at 20°C, 1013 mbar, auto-calibration ON), ±1 K
Sensor	CO2: non-dispersive infrared sensor (NDIR); Temperature: resistance sensor
Sensor protection	sinter filter
Supply voltage	24 V AC/DC (±5%)
Analogue output 4-20 mA	3-wire connection
Alarm output	1 x potential-free change-over contact, 48 V, 1 A
Cable gland	PG11 high-strength cable gland with strain relief
Protection type	Housing/electronic: IP65, Sensor: IP30

General Technical Data p.157

Changer | 0-10 V | 4-20 mA

CO2VOC-A/A

CO2 and mixed gas VOC air quality sensor with measurement range switch

Measurand: CO2, VOC
Output: 2 x 0-10 V, 2 x 4-20 mA, Relay
Highlights: easy-to-install surface-mounted housing, sensor protection with sinter filter

Dimensional Drawing: p.350 #085 | Connection Drawing: p.307 #041 | Price Table: p.388

Measurement range CO2	0-10000 ppm
Measurement range VOC	0-100% (good / bad air quality, referring to the calibration gas)
Scales	0-2000/5000/10000 ppm
Accuracy	CO2: 0-2000 ppm: ±50 ppm + 2% f. mv, 0-5000 ppm: ±50 ppm + 3% f. mv, else: ±100 ppm + 5% f. mv; VOC: ±15% FS (20°C, 1013 mbar, auto-calibration ON)
Sensor	CO2: nondispersive infrared sensor (NDIR); VOC: metal oxide sensor
Sensor protection	sinter filter
Supply voltage	24 V AC/DC (±5%)
Analogue output 4-20 mA	3-wire connection
Alarm output	1 x potential-free change-over contact, 48 V, 1 A
Cable gland	PG11 high-strength cable gland with strain relief
Protection type	Housing/electronic: IP65, Sensor: IP30

General Technical Data p.157

Changer | 0-10 V | 4-20 mA

CO2-K/A

CO2 air quality sensor for ducts with measurement range switch

Measurand: CO2
Output: 0-10 V, 4-20 mA, Relay
Highlights: Protection tube: stainless steel

Dimensional Drawing: p.352 #091 | Connection Drawing: p.306 #039 | Price Table: p.385

Measurement range CO2	0-10000 ppm
Scales	0-2000/5000/10000 ppm
Accuracy	0-2000 ppm: ±50 ppm + 2% f. mv, 0-5000 ppm: ±50 ppm + 3% f. mv, else: ±100 ppm + 5% f. mv (at 20°C, 1013 mbar, auto-calibration ON)
Sensor	Nondispersive infrared sensor (NDIR)
Sensor protection	sinter filter
Supply voltage	24 V AC/DC (±5%)
Analogue output 4-20 mA	3-wire connection
Alarm output	1 x potential-free change-over contact, 48 V, 1 A
Cable gland	PG11 high-strength cable gland with strain relief
Material	Protection tube: stainless steel V2A
Protection type	Housing/electronic: IP65, Sensor: IP30

General Technical Data p.157

Changer | 0-10 V | 4-20 mA

CO2T-K/A

CO2 and temperature sensor for ducts with measurement range switch

Measurand: temperature, CO2
Output: 2 x 0-10 V, 2 x 4-20 mA, Relay
Highlights: easy to install with included mounting flange

Dimensional Drawing: p.352 #091 | Connection Drawing: p.307 #040 | Price Table: p.387

Measurement range CO2	0-10000 ppm
Measurement range temp.	0...+50°C
Scales	0-2000/5000/10000 ppm
Accuracy	0-2000 ppm: ±50 ppm + 2% f. mv, 0-5000 ppm: ±50 ppm + 3% f. mv, else: ±100 ppm + 5% f. mv (at 20°C, 1013 mbar, auto-calibration ON), ±1 K
Sensor	CO2: non-dispersive infrared sensor (NDIR); Temperature: resistance sensor
Sensor protection	sinter filter
Supply voltage	24 V AC/DC (±5%)
Analogue output 4-20 mA	3-wire connection
Alarm output	1 x potential-free change-over contact, 48 V, 1 A
Cable gland	PG11 high-strength cable gland with strain relief
Material	Protection tube: stainless steel V2A
Protection type	Housing/electronic: IP65, Sensor: IP30

General Technical Data p.157

Changer | 0-10 V | 4-20 mA

CO2VOC-K/A

CO2 and mixed gas VOC air quality sensor for ducts with measurement range switch

Measurand: CO2, VOC
Output: 2 x 0-10 V, 2 x 4-20 mA, Relay
Highlights: easy to install with included mounting flange

Dimensional Drawing: p.352 #091 | Connection Drawing: p.307 #041 | Price Table: p.388

Measurement range CO2	0-10000 ppm
Measurement range VOC	0-100% (good / bad air quality, referring to the calibration gas)
Scales	0-2000/5000/10000 ppm
Accuracy	CO2: 0-2000 ppm: ±50 ppm + 2% f. mv, 0-5000 ppm: ±50 ppm + 3% f. mv, else: ±100 ppm + 5% f. mv; VOC: ±15% FS (20°C, 1013 mbar, auto-calibration ON)
Sensor	CO2: nondispersive infrared sensor (NDIR); VOC: metal oxide sensor
Sensor protection	sinter filter
Supply voltage	24 V AC/DC (±5%)
Analogue output 4-20 mA	3-wire connection
Alarm output	1 x potential-free change-over contact, 48 V, 1 A
Cable gland	PG11 high-strength cable gland with strain relief
Material	Protection tube: stainless steel V2A
Protection type	Housing/electronic: IP65, Sensor: IP30

General Technical Data p.157

Changer | 0-10 V | 4-20 mA

CO2-R/A

CO2 air quality sensor for indoors with measurement range switch

Measurand: CO2
Output: 0-10 V, 4-20 mA, Relay
Highlights: modern room hoousing, optional LDC-Display

Dimensional Drawing: p.333 #034 | Connection Drawing: p.307 #042 | Price Table: p.386

Measurement range CO2	0-10000 ppm
Scales	0-2000/5000/10000 ppm
Accuracy	0-2000 ppm: ±50 ppm + 2% f. mv, 0-5000 ppm: ±50 ppm + 3% f. mv, else: ±100 ppm + 5% f. mv (at 20°C, 1013 mbar, auto-calibration ON)
Sensor	Nondispersive infrared sensor (NDIR)
Sensor protection	mounted inside housing
Supply voltage	24 V AC/DC (±5%)
Analogue output 4-20 mA	3-wire connection
Alarm output	1 x potential-free change-over contact, 48 V, 1 A
Cable gland	on the back or housing side (predetermined breaking point)
Protection type	IP30, IP20 (with display)

General Technical Data p.157

Changer | 0-10 V | 4-20 mA

CO2T-R/A

CO2 and temperature sensor for indoors with measurement range switch

Measurand: temperature, CO2
Output: 2 x 0-10 V, 2 x 4-20 mA, Relay
Highlights: modern housing design, optional LCD-Display

Dimensional Drawing: p.333 #034 | Connection Drawing: p.308 #043 | Price Table: p.387

Measurement range CO2	0-10000 ppm
Measurement range temp.	0...+50°C
Scales	0-2000/5000/10000 ppm
Accuracy	0-2000 ppm: ±50 ppm + 2% f. mv, 0-5000 ppm: ±50 ppm + 3% f. mv, else: ±100 ppm + 5% f. mv (at 20°C, 1013 mbar, auto-calibration ON), ±1 K
Sensor	CO2: non-dispersive infrared sensor (NDIR); Temperature: resistance sensor
Sensor protection	mounted inside housing
Supply voltage	24 V AC/DC (±5%)
Alarm output	1 x potential-free change-over contact, 48 V, 1 A
Cable gland	on the back or housing side (predetermined breaking point)
Protection type	IP30, IP20 (with display)

General Technical Data p.157

Changer | 0-10 V | 4-20 mA

CO2VOC-R/A

CO2 and mixed gas VOC air quality sensor for indoors with measurement range switch

Measurand: CO2, VOC
Output: 2 x 0-10 V, 2 x 4-20 mA, Relay
Highlights: modern housing design, optional LCD-Display

Dimensional Drawing: p.333 #034 | Connection Drawing: p.308 #044 | Price Table: p.389

Measurement range CO2	0-10000 ppm
Measurement range VOC	0-100% (good / bad air quality, referring to the calibration gas)
Scales	0-2000/5000/10000 ppm
Accuracy	CO2: 0-2000 ppm: ±50 ppm + 2% f. mv, 0-5000 ppm: ±50 ppm + 3% f. mv, else: ±100 ppm + 5% f. mv; VOC: ±15% FS (20°C, 1013 mbar, auto-calibration ON)
Sensor	CO2: nondispersive infrared sensor (NDIR); VOC: metal oxide sensor
Sensor protection	mounted inside housing
Supply voltage analog 0-10 V	24 V AC/DC (±5%)
Supply voltage analog 4-20 mA	15...36 V DC (Ubmin = 15 V + RLoad*0,02A)
Analogue output 4-20 mA	3-wire connection
Alarm output	1 x potential-free change-over contact, 48 V, 1 A
Cable gland	on the back or housing side (predetermined breaking point)
Protection type	IP30, IP20 (with display)

General Technical Data p.157

Changer | 0-10 V | 4-20 mA | Modbus

CO2-U/A

CO2 air quality sensor for flush mounting indoors

Measurand: CO2
Output: 0-10 V, NOC
Highlights: discrete flush mounting

Dimensional Drawing: p.339 #054 | Connection Drawing: p.308 #045 | Price Table: p.386

Measurement range CO2	0-2000 ppm (optional: 0-5000 ppm, 0-10000 ppm, 0-20000 ppm)
Accuracy	0-2000 ppm: ±50 ppm + 2% f. mv, 0-5000 ppm: ±50 ppm + 3% f. mv, else: ±100 ppm + 5% f. mv (at 20°C, 1013 mbar, auto-calibration ON)
Sensor	Nondispersive infrared sensor (NDIR)
Sensor protection	mounted inside housing
Supply voltage	24 V AC/DC (±5%)
Alarm output	potential-free change-over contact max. 24 V (100 mA), threshold can be defined by 270° potentiometer
Light switch program	GIRA Standard 55, pure white satin (other on request)
Cable gland	bottom side
Protection type	IP30

General Technical Data p.157

Changer | 0-10 V | 4-20 mA

CO2-P/A

CO2 air quality sensor with pendulum sensor, active output (0-10 V or 4-20 mA)

Measurand: CO2
Output: 0-10 V, 4-20 mA, Relay
Highlights: sensor protection: sintered filter, easy installation, pendulum sensor

Dimensional Drawing: p.352 #092 | Connection Drawing: p.309 #046 | Price Table: p.385

Measurement range CO2	0-10000 ppm
Scales	0-2000/5000/10000 ppm
Accuracy	0-2000 ppm: ±50 ppm + 2% f. mv, 0-5000 ppm: ±50 ppm + 3% f. mv, else: ±100 ppm + 5% f. mv (at 20°C, 1013 mbar, auto-calibration ON)
Sensor	Nondispersive infrared sensor (NDIR)
Sensor protection	sinter filter
Supply voltage	24 V AC/DC (±5%)
Analogue output 4-20 mA	3-wire connection
Alarm output	1 x potential-free change-over contact, 48 V, 1 A
Cable	2 m PVC cable
Cable gland	PG11 high-strength cable gland with strain relief
Protection type	Housing/electronic: IP65, Sensor: IP30

General Technical Data p.157

Air Quality CO

Our air quality sensors measure the CO concentration and the temperature of the ambient air and convert the measured values into an analogue 0-10 V or 4-20 mA output signal.

Changeover contact

The measuring devices can be expanded with a potential-free changeover contact, the switching threshold of which is determined via a potentiometer. The relay output can be defined for CO, temperature, both CO and temperature (on a first-come, first-served basis).

DIP switch technology

CO scaling and relay functions can be configured using the DIP switch on the device board.

Offset potentiometer

A manual fine calibration of the temperature is possible during ongoing operation with an offset potentiometer. The characteristic curve is shifted to the original one.

MADE IN GERMANY

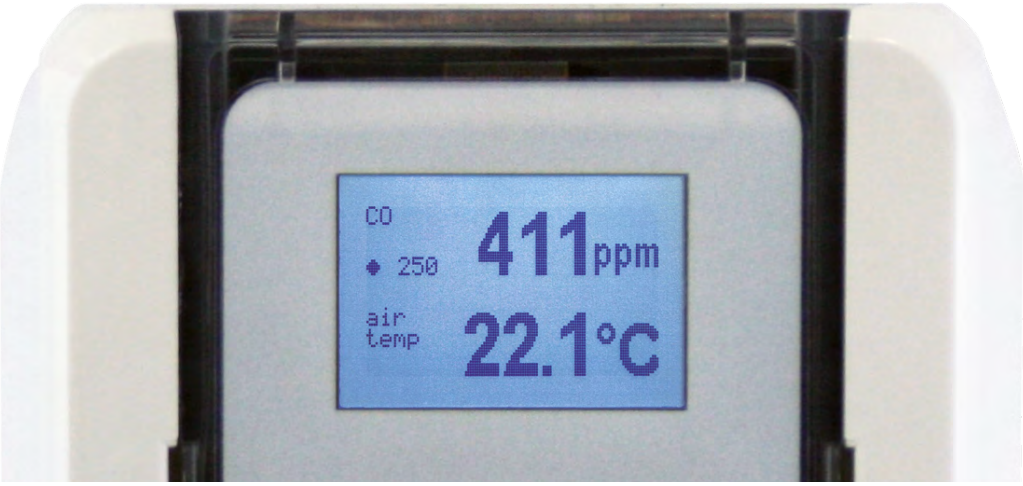

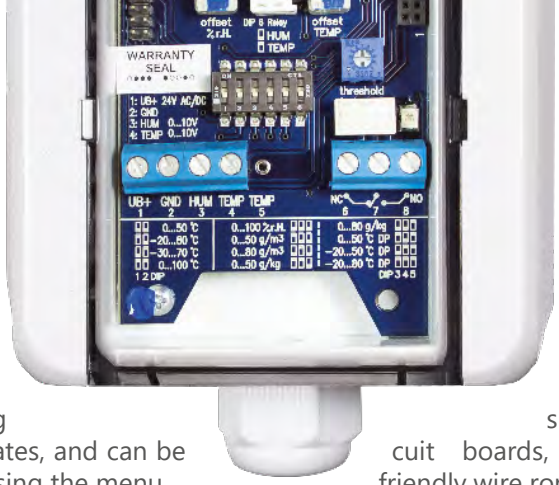

Display

The optional backlit LCD display is used to display actual values, min/max values, switching thresholds, relay states, and can be rotated every 90° using the menu.

Easy assembly

Housings with innovative hinge locking technology (→page 32), sufficient terminal space, labelled circuit boards, and connection-friendly wire rope clamps offer maximum ease of installation and speed.

Device settings

The min/max interval, the relay switching hysteresis, various display options (brightness, contrast, display mode, smileys) etc. can be set in the device configuration via the display menu.

Best quality

With high-quality components, modern serial production, automated testing/calibration setups, and a 100% final inspection, you will be getting a product with the „Made in Germany“ guarantee of quality.

General Technical Data	
Messbereich CO	0-1000 ppm
Skalierungen	0-200/500/1000 ppm
Temperaturabhängigkeit	CO: ±2 ppm / K
Ansprechzeit (t90)	< 5 min
Langzeitstabilität	±1% EW/Jahr
Einlaufzeit	1 min
Spannungsversorgung	24 V AC/DC (±5%)
Stromaufnahme	max. 100 mA
Analogausgang 0-10 V	3-Leiteranschluss
Analogausgang 4-20 mA	3-Leiteranschluss
Alarmausgang	1 x potentialfreier Wechselkontakt, 48 V, 1 A
Schalt-Hysterese Relais	2% EW (ohne Display), 0,5...5% EW einstellbar (mit Display)
Elektrischer Anschluss	Schraubklemmen max. 1,5 mm²
Schutzklasse	III
Arbeitsbereich r.F.	0...98% r.F. in schadstofffreier, nicht kondensierender Luft
Betriebstemperatur	0...+50°C
Lagertemperatur	-20...+50°C
Zulassungen	CE, EAC, RoHS

Changer | 0-10 V | 4-20 mA

CO-A/A

CO air quality sensor with measurement range switch

Measurand: CO
Output: 0-10 V, 4-20 mA, Relay
Highlights: easy-to-install surface-mounted housing, sensor protection with sinter filter

Dimensional Drawing: p.350 #085 | Connection Drawing: p.309 #047 | Price Table: p.383

Accuracy	±5 ppm + max. ±5% f. mv (at 20°C, 50% r.H.)
Sensor	Electrochemical sensor
Sensor protection	sinter filter
Cable gland	PG11 high-strength cable gland with strain relief
Protection type	Housing/electronic: IP65, Sensor: IP30

General Technical Data p.171

Changer | 0-10 V | 4-20 mA

COT-A/A

CO and temperature sensor with measurement range switch

Measurand: temperature, CO
Output: 2 x 0-10 V, 2 x 4-20 mA, Relay
Highlights: easy-to-install surface-mounted housing, sensor protection with sinter filter

Dimensional Drawing: p.351 #090 | Connection Drawing: p.309 #048 | Price Table: p.389

Measurement range temp.	0...+50°C
Accuracy	±5 ppm + max. ±5% f. mv (at 20°C, 50% r.H.), ±1 K
Sensor	CO: electrochemical sensor, Temperature: resistance sensor
Sensor protection	sinter filter
Cable gland	PG11 high-strength cable gland with strain relief
Protection type	Housing/electronic: IP65, Sensor: IP30

General Technical Data p.171

Changer | 0-10 V | 4-20 mA

CO-K/A

CO air quality sensor for ducts with measurement range switch

Measurand: CO
Output: 0-10 V, 4-20 mA, Relay
Highlights: easy to install with included mounting flange

Dimensional Drawing: p.352 #091 | Connection Drawing: p.309 #047 | Price Table: p.383

Accuracy	±5 ppm + max. ±5% f. mv (at 20°C, 50% r.H.)
Sensor	Electrochemical sensor
Sensor protection	sinter filter
Cable gland	PG11 high-strength cable gland with strain relief
Material	Protection tube: stainless steel V2A
Protection type	Housing/electronic: IP65, Sensor: IP30

General Technical Data p.171

Changer | 0-10 V | 4-20 mA

COT-K/A

CO and temperature sensor for ducts with measurement range switch

Measurand: temperature, CO
Output: 2 x 0-10 V, 2 x 4-20 mA, Relay
Highlights: easy to install with included mounting flange

Dimensional Drawing: p.352 #091 | Connection Drawing: p.309 #048 | Price Table: p.390

Measurement range temp.	0...+50°C
Accuracy	±5 ppm + max. ±5% f. mv (at 20°C, 50% r.H.), ±1 K
Sensor	CO: electrochemical sensor, Temperature: resistance sensor
Sensor protection	sinter filter
Cable gland	PG11 high-strength cable gland with strain relief
Material	Protection tube: stainless steel V2A
Protection type	Housing/electronic: IP65, Sensor: IP30

General Technical Data p.171

Changer | 0-10 V | 4-20 mA

CO-R/A

CO air quality sensor for indoors with measurement range switch

Measurand: CO
Output: 0-10 V, 4-20 mA, Relay
Highlights: modern housing design, optional LCD-Display

Dimensional Drawing: p.333 #034 | Connection Drawing: p.310 #049 | Price Table: p.384

Accuracy	±5 ppm + max. ±5% f. mv (at 20°C, 50% r.H.)
Sensor	Electrochemical sensor
Sensor protection	mounted inside housing
Cable gland	on the back or housing side (predetermined breaking point)
Protection type	IP30, IP20 (with display)

General Technical Data p.171

Changer | 0-10 V | 4-20 mA

COT-R/A

CO and temperature sensor for indoors with measurement range switch

Measurand: temperature, CO
Output: 2 x 0-10 V, 2 x 4-20 mA, Relay
Highlights: modern housing design, optional LCD-Display

Dimensional Drawing: p.333 #034 | Connection Drawing: p.310 #050 | Price Table: p.390

Measurement range temp.	0...+50°C
Accuracy	±5 ppm + max. ±5% f. mv (at 20°C, 50% r.H.), ±1 K
Sensor	CO: electrochemical sensor, Temperature: resistance sensor
Sensor protection	mounted inside housing
Cable gland	on the back or housing side (predetermined breaking point)
Protection type	IP30, IP20 (with display)

General Technical Data p.171

Transducer Particulate Matter

Our air quality sensors use a laser-based sensor to detect the particles/fine dust in the ambient air and convert the measured values into an analogue 0-10 V or 4-20 mA output signal.

Changeover contact

The measuring devices can be expanded with a potential-free changeover contact, the switching threshold of which is determined via a potentiometer.

DIP switch technology

The particle scaling (PM2.5, PM10) can be configured using the DIP switch on the device board.

Display

The optional backlit LCD display is used to display actual values, min/max values, switching thresholds, relay states, and can be rotated every 90° using the menu.

Device settings

The min/max interval, the relay switching hysteresis, various display options (brightness, contrast, display mode) etc. can be set in the device configuration via the display menu.

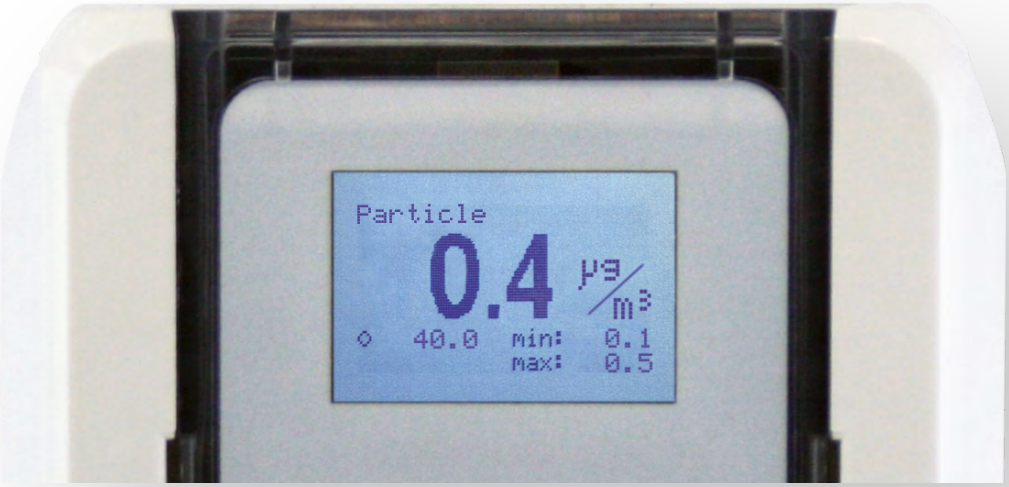

Easy assembly

Housings with innovative hinge locking technology (→page 32), sufficient terminal space, labelled circuit boards, and connection-friendly wire rope clamps offer maximum ease of installation and speed.

Best quality

With high-quality components, modern serial production, automated testing/calibration setups, and a 100% final inspection, you will be getting a product with the „Made in Germany“ guarantee of quality.

Changer | 0-10 V | 4-20 mA

FS4408

Transmitter particulate matter / particles, active output (0-10V and 4-20mA)

Measurand: particulate matter
Output: 0-10 V, 4-20 mA, Relay
Highlights: PM2.5, PM10

Dimensional Drawing: S.373 #154 | Connection Drawing: S.306 #039 | Price Table: S.422

Measurement range PM2.5/PM10	0 µg/m³ ... 1000 µg/m³
Accuracy PM2.5/PM10	±5 µg/m³ + max. ±4% FS (@ 20°C, 45% r.F., 1013 mbar)
Temperature dependency	±1% FS / 10 K
Response time (t90)	< 1 s
Long term stability	±1% FS/year
Sensor	laser-based sensor
Supply voltage	24 V AC/DC (±5%)
Analogue output 0-10 V	3-wire connection
Analogue output 4-20 mA	3-wire connection
Alarm output	1 x potential-free change-over contact, 48 V, 1 A
Switching Hysteresis Relay	2% FS (without Display), 0,5...5% FS adjustable (with Display)
Electrical connection	screw terminals max. 1,5 mm²
Cable gland	PG11 high-strength cable gland with strain relief
Protection type	IP65 (housing/electronic), IP20 (sensor)
Protection class	III
Working range r.H.	0...98% r.H. in contaminant-free, non-condensing air
Working temperature	0...+50°C
Storage temperature	-20...+50°C
Approvals	CE, EAC, RoHS

Transducer Oxygen O2

Our air quality sensors use an electrochemical sensor to measure the oxygen content in the ambient air and convert the measured values into an analog 0-10 V output signal.

Changeover contact

The measuring devices can be expanded with a potential-free changeover contact, the switching threshold of which is determined via a potentiometer.

DIP switch technology

The particle scaling (PM2.5, PM10) can be configured using the DIP switch on the device board.

Automatic/manual zero point adjustment

The air quality sensor with a 0-25% vol. measurement range carries out an automatic recalibration at regular intervals to ensure stable measurements over the long time.
This autocalibration can also be deactivated and carried out manually using a button on the device.

Display

The optional backlit LCD display is used to display actual values, min/max values, switching thresholds, relay states, and can be rotated every 90° using the menu.

Device settings

The min/max interval, the relay switching hysteresis, various display options (brightness, contrast, display mode) etc. can be set in the device configuration via the display menu.

Easy assembly

Housings with innovative hinge locking technology (→page 32), sufficient terminal space, labelled circuit boards, and connection-friendly wire rope clamps offer maximum ease of installation and speed.

Best quality

With high-quality components, modern serial production, automated testing/calibration setups, and a 100% final inspection, you will be getting a product with the „Made in Germany" guarantee of quality.

Changer | 0-10 V | 4-20 mA | Modbus

FS4309

Transmitter Oxygen O2, active output (0-10 V)

Measurand: oxygen O2
Output: 0-10 V, Relay
Highlights: O2 content in the air

Dimensional Drawing: S.373 #155 | Connection Drawing: S.319 #073 | Price Table: S.422

Measurement range O2	0...25% vol. optional 0...100% vol
Accuracy O2	± 0,2% vol. + max. ±0,5% FS (@ 20°C, 45% r.H., 1013 mbar)
Temperature dependency	±1% FS / 10 K
Response time (t90)	< 1 s
Long term stability	±0,2% FS/year by auto-calibration ON
Sensor	Electrochemical sensor
Supply voltage	24 V DC (±5%)
Analogue output 0-10 V	3-wire connection
Alarm output	1 x potential-free change-over contact, 48 V, 1 A
Switching Hysteresis Relay	2% of the selected scaling (without display), 0,5...5% of the selected scaling adjustable (with display)
Electrical connection	screw/plug terminals max. 1,5 mm²
Cable gland	PG11 high-strength cable gland with strain relief
Protection type	IP65 (housing/electronic), IP20 (sensor)
Protection class	III
Working range r.H.	0...98% r.H. in contaminant-free, non-condensing air
Working temperature	0...+50°C
Storage temperature	-20...+50°C
Approvals	CE, EAC, RoHS

General Technical Data S.88

Air Quality
Smoke Detector

The smoke detector has been developed to detect smoke. The duct smoke detector UG-5 combines a smoke detector and an adaptor system where both tube and housing are specially designed for optimum airflow through the smoke detector.

Flexible Installation Position

The duct smoke detector UG-5 can be installed on any side of the duct in four different positions: 0°, 90°, 180° and 270°.

Alarm Relays

The duct smoke detector UG-5 has 2 alarm relays to control fire-safety dampers, to stop ventilation fans or to activate acoustic and optical alarms etc., 1 service alarm relay to let you know when maintenance is needed, before a false alarm occurs, 1 system error relay indicating fault on the smoke detector circuit, 1 low-flow relay indicating that air flow in the duct is low or that the UG-5 is installed in an inexpedient place on the duct. The smoke detector contains an intelligent controlling circuit.

Controlling Circuit

This circuit is adjusting the sensitivity to give an optimal function during the whole life time of the detector. When the controlling circuit has reached the maximum sensitivity compensation for contamination, a service alarm is indicated. The detector has a bayonet fitting to simplify mounting and removal.

General Technical Data	
Measuring principle	opto-electronic
Working temperature	-10...+55°C

UG-5

Duct smoke detector for air ventilation ducts

Measurand: fire smoke
Output: 2 Relay, 3 NOC (yes/no), Modbus RTU
Highlights: Integriertes Steuergerät (eigenständiges Gerät), VdS, CE, DIBt, 4 Einbaulagen 0°, 90°, 180° und 270°

Dimensional Drawing: S.352 #093 | Connection Drawing: S.310 #051 | Price Table: S.470

Supply voltage	24 V AC/DC or 230 V AC (±10%)
Current consumption	max. 30 mA at 230 V AC, max. 220 mA at 24 V AC/DC
Alarm output	2 x potential-free change-over contact max. 250 V (8 A), 3 x potential-free normally-open contact max. 250 V (8 A)
Equipment	LED on smoke detector: green - service alarm, red - smoke alarm; LED on PCB: green - normal operation, yellow - system error, yellow - low-flow, red - smoke alarm (only in version '-Z'), red blinking - alarm memory (only in version '-Z')
Material	Protection tube: aluminium
Weight	ca. 1100 g
Protection type	IP54
Protection class	II
Working range r.H.	0...99% r.H.
Flow rate	1-20 m/s
Approvals	VdS G205041, CE, prEN-54-27, DIBt Z-78.6-232CE-conformity, prEN-54-27, DIBt Z-78.6-232

General Technical Data S.180

ST-P-OM

Smoke detector for ceiling mounting

Measurand: fire smoke
Output: Relay
Highlights: certified by VdS in Germany, G207134, Quick and simple installation with bayonet

Dimensional Drawing: S.353 #094 | Connection Drawing: S.311 #052 | Price Table: S.463

Supply voltage	12...24 V DC
Current consumption	max. 50 mA
Alarm output	potential-free change-over contact, max. 24 V, 1 A
Equipment	LED on smoke detector: rot - fire alarm detection
Weight	ca. 215 g
Protection type	IP22
Protection class	III
Working range r.H.	0...95% r.H.
Approvals	CE, EN54-7

General Technical Data S.180

Flow Transducers

Our flow transducers record the air speed and ambient temperature in the air duct via a silicon sensor or a diode and convert the measured value into an analog 0-10 V or 4-20 mA output signal.

Changeover contact

The measuring devices can be expanded with a potential-free changeover contact, the switching threshold of which is determined via a potentiometer.

DIP switch technology

Various scales and calculated measured variables (volume flow) can be configured as a linear output signal using the DIP switch on the device board.

Display

The optional backlit LCD display is used to display actual values, min/max values, switching thresholds, relay states, and can be rotated every 90° using the menu.

Device settings

The min/max interval, the relay switching hysteresis, various display options (brightness, contrast, display mode) etc. can be set in the device configuration via the display menu.

MADE IN GERMANY

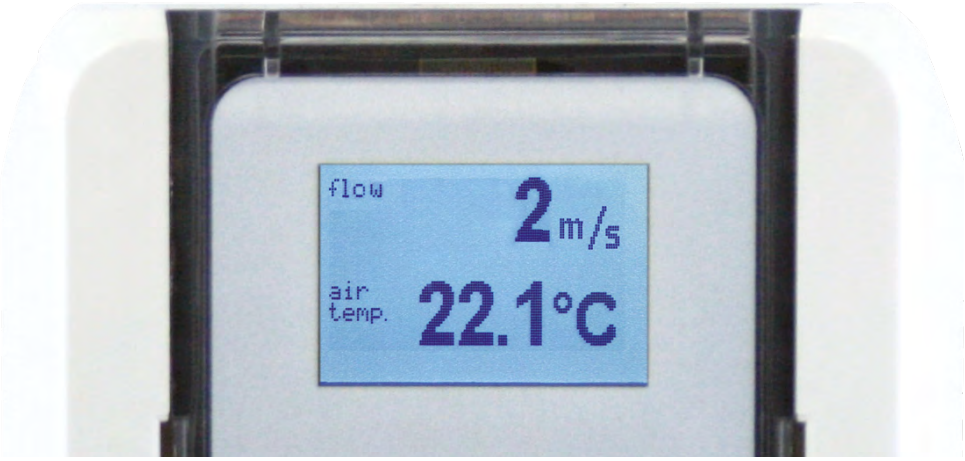

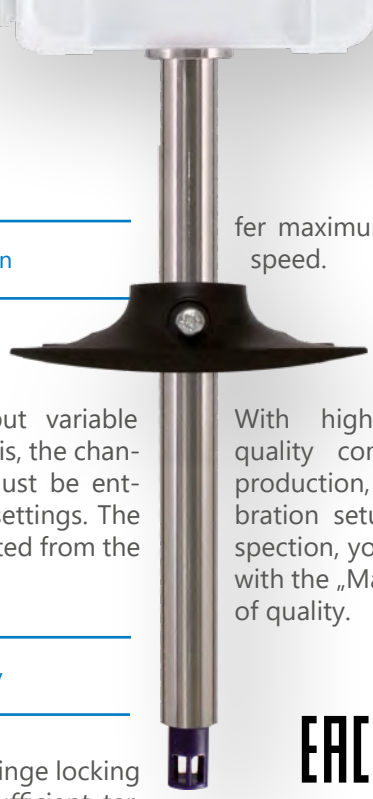

Flow calculation

In the case of display devices, the volume flow can be selected as the output variable using the DIP switch. For this, the channel cross-sectional area must be entered in cm² in the device settings. The volume flow is then calculated from the flow velocity.

Easy assembly

Housings with innovative hinge locking technology (→page 32), sufficient terminal space, labelled circuit boards, and connection-friendly wire rope clamps offer maximum ease of installation and speed.

Best quality

With high-quality components, modern serial production, automated testing/calibration setups, and a 100% final inspection, you will be getting a product with the „Made in Germany" guarantee of quality.

General Technical Data	
Measuring principle	calorimetric measuring method
Measurement range temp.	0...+50°C
Accuracy	±0,3 m/s + max. ±4% FS (@ 20°C, 45% r.H., 1013 mbar), ±0,5 K (@ 20°C, > 1 m/s)
Temperature dependency	±1% FS / 10 K
Long term stability	±1% FS/year, ±0,2 K/year
Response time (t90)	> 4 s @ 10 m/s
Running-in time	< 30 s at initial operation because of tempering
Output attentuation	5 s
Supply voltage	24 V AC/DC
Current consumption at 0-10 V	Ø 100 mA
Current consumption at 4-20 mA	< 140 mA
Current consumption at relay	< 120 mA
Analogue output 0-10 V	3-wire connection, min. load resistance 100 kOhm
Analogue output 4-20 mA	3-wire connection, max. RLoad(Ohm) = 300 Ohm
Alarm output	1 x potential-free change-over contact, 48 V, 1 A
Switching Hysteresis Relay	2% of the selected scaling (without display), 0,5...5% of the selected scaling adjustable (with display)
Electrical connection	screw terminals max. 1,5 mm²
Cable gland	PG11 high-strength cable gland with strain relief
Material	Protection tube: stainless steel V2A
Protection type	Housing/electronic: IP65, Sensor: IP30
Protection class	III
Working temperature	-20...+50°C
Storage temperature	-20...+50°C
Approvals	CE, EAC, RoHS

Changer | 0-10 V | 4-20 mA

FS5020

Flow transmitter duct for laminar airflow, volume flow and temperature, active output (0-10V or 4-20mA)

Measurand: temperature, flow, volume flow
Output: 2 x 0-10 V, 2 x 4-20 mA, Relay
Highlights: volume calculation without k-factor

Dimensional Drawing: S.353 #095 | Connection Drawing: S.311 #053 | Price Table: S.423

Measurement range flow	0-5 m/s
Scales	0-1 m/s, 0-2 m/s, 0-3 m/s, 0-4 m/s, 0-5 m/s
Measurement range volume flow (calculated)	0-65.000 m^3/h
Working range	0,3-5 m/s, 0...98% r.H. in contaminant-free, non-condensing air

General Technical Data S.183

Changer | 0-10 V | 4-20 mA

FS5021

Flow transmitter duct for airflow, volume flow and temperature, active output (0-10V or 4-20mA)

Measurand: temperature, flow, volume flow
Output: 2 x 0-10 V, 2 x 4-20 mA, Relay
Highlights: volume calculation without k-factor

Dimensional Drawing: S.353 #095 | Connection Drawing: S.311 #053 | Price Table: S.424

Measurement range flow	0-20 m/s
Scales	0-3 m/s, 0-5 m/s, 0-10 m/s, 0-15 m/s, 0-20 m/s
Measurement range volume flow (calculated)	0-200.000 m^3/h
Working range	0,3-20 m/s, 0...98% r.H. in contaminant-free, non-condensing air

General Technical Data S.183

Flow Controllers

Our flow monitors record the flow speed in the air duct or in liquid media using a wind vane or paddle and switch a change-over contact when a specified switching threshold is exceeded.

Switching threshold

The switching threshold is set using an internal screw.

Easy assembly

Housings with sufficient clamping space and connection-friendly screw terminals offer maximum ease of installation and speed.

Best quality

With high-quality components, modern serial production, automated testing/calibration setups, and a reliable final inspection, you will be getting a product with the „Made in Germany“ guarantee of quality.

General Technical Data	
Alarm output	potential-free change-over contact, thresholds can be defined by internal screws
Switching capacity	15 (8) A, 24 - 250 V~, at 24 V~ min. 150 mA
Protection type	IP65
Protection class	I

SRW/N

Flow controller for liquids

Measurand: flow
Output: Relay
Highlights: threshold 0,2-172,5 m3/h, change-over contact, pipe 1/2 inch up to 8 inch

Dimensional Drawing: S.353 #096 | Connection Drawing: S.311 #054 | Price Table: S.463

Measurement range flow	0,2-172,5 m3/h
Accuracy	±15% FS
T-Unit	Grey cast iron, the attached T-Unit material is brass
Colour	grey (backside RAL 7016, top RAL 7035)
Material	Paddle: brass or stainless steel V4A
Working tempe-rature	-30...+110°C
Approvals	TÜV according to flow 100

General Technical Data S.186

WFR/N

Air flow controller with relay

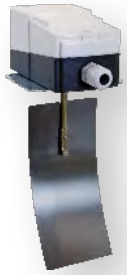

Measurand: flow
Output: Relay
Highlights: 1-9,2 m/s, potential-free change-over contact, thresholds can be defined by internal screws

Dimensional Drawing: S.354 #097 | Connection Drawing: S.312 #055 | Price Table: S.474

Measurement range flow	1-9,2 m/s
Differential	≥ 1 m/s
Min. start-up value	2,0 m/s
Max. start-up value	9,2 m/s
Min. cut-out value	1,0 m/s
Max. release value	8,0 m/s
Colour	grey (backside RAL 7096, top RAL 7035)
Material	brass, vane V2A stainless steel (1.4301)
Working tempe-rature	-30...+80°C
Approvals	CE, EAC, RoHS

General Technical Data S.186

Brightness and Motion

Our brightness transducers and motion detectors record the brightness and movement via a photodiode or infrared sensor and convert the measured values into an analog 0-10 V output signal and switch a changeover contact when a specified switching threshold is exceeded.

Fresnel lens

A Fresnel lens increases the angle of incidence and thus the light detection range. The diffuse light conduction to the sensor minimizes interference and incorrect influences.

DIP switch technology

Various lux scalings can be configured using the DIP switch on the device board.

Offset potentiometer

A manual fine calibration of brightness is possible during ongoing operation with an offset potentiometer. The characteristic curve is shifted to the original one.

Hold time

When moving is detected, a changeover contact switches; the hold time can be set as desired from 5 seconds to 15 minutes using a 270° potentiometer.

Light-guided motion detection

A setting can be made on the device board so that the motion detection is dependent on the measured brightness (light-guided motion detection). The desired light intensity is set as desired using a potentiometer.

Device settings

The min/max interval, various display options (brightness, contrast, display mode) etc. can be set in the device configuration via the display menu.

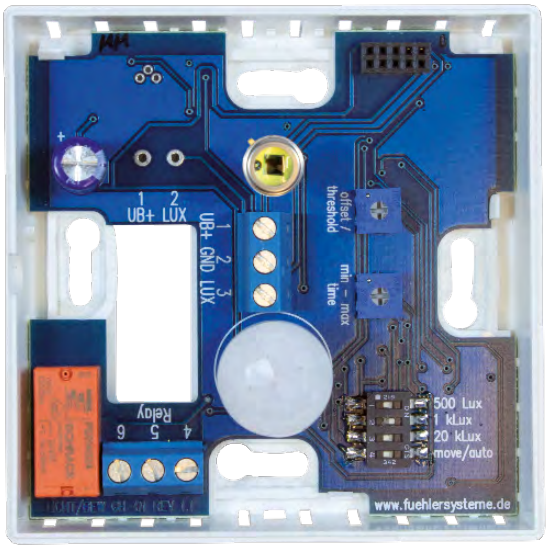

MADE IN GERMANY

Easy assembly

Housings with innovative hinge locking technology (→page 32), sufficient terminal space, labelled circuit boards, and connection-friendly wire rope clamps offer maximum ease of installation and speed.

Best quality

With high-quality components, modern serial production, automated testing/calibration setups, and a 100% final inspection, you will be getting a product with the „Made in Germany" guarantee of quality.

Allgemeine Technische Daten	
Protection class	III
Working range r.H.	0...98% r.H. in contaminant-free, non-condensing air
Storage temperature	-20...+50°C
Approvals	CE, EAC, RoHS

BFA/A

Motion sensor with infrared sensor

Measurand: motion
Output: Relay
Highlights: alteration of position from persons and subjects with an temperature difference of > 3 K to the sensor

Dimensional Drawing: p.354 #098 | Connection Drawing: p.312 #056 | Price Table: p.382

Measuring principle	alteration of position from persons and subjects with an temperature difference of > 3 K to the sensor
Measurement range motion	motion yes/no, apex angle 90°/110° on 360° range, reach 10 m
Response time (t90)	< 1 s
Sensor	infrared motion sensor
Sensor protection	cast inside housing
Supply voltage	24 V AC/DC (±5%)
Current consumption	max. 20 mA at 24 V DC
Alarm output	1 x potential-free change-over contact, 48 V, 1 A
Holding time	adjustable from 5 sec. up to 15 min. by 270° potentiometer
Electrical connection	screw terminals max. 1,5 mm²
Cable gland	PG11 high-strength cable gland with strain relief
Protection type	IP65
Working temperature	Electronic: -20...+50°C

General Technical Data p.189

BFR/A

Motion sensor with infrared sensor for indoors

Measurand: motion
Output: Relay
Highlights: modern housing design

Dimensional Drawing: p.354 #099 | Connection Drawing: p.312 #057 | Price Table: p.382

Measuring principle	alteration of position from persons and subjects with an temperature difference of > 3 K to the sensor
Measurement range motion	motion yes/no, apex angle 90°/110° on 360° range, reach 10 m
Response time (t90)	< 1 s
Sensor	infrared motion sensor
Sensor protection	mounted inside housing
Supply voltage	24 V AC/DC (±5%)
Current consumption	max. 20 mA at 24 V DC
Alarm output	1 x potential-free change-over contact, 48 V, 1 A
Holding time	adjustable from 5 sec. up to 15 min. by 270° potentiometer
Electrical connection	screw terminals max. 1,5 mm²
Cable gland	on the back or housing side (predetermined breaking point)
Protection type	IP30
Working temperature	0...+50°C

General Technical Data p.189

BFD/A

Motion sensor with infrared sensor for ceiling installation

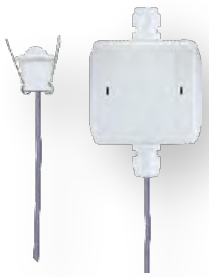

Measurand: motion
Output: Relay
Highlights: change-over contact

Dimensional Drawing: p.355 #100 | Connection Drawing: p.312 #056 | Price Table: p.382

Measuring principle	alteration of position from persons and subjects with an temperature difference of > 3 K to the sensor
Measurement range motion	motion yes/no, apex angle 90°/110° on 360° range, reach 10 m
Response time (t90)	< 1 s
Sensor	infrared motion sensor
Sensor protection	mounted inside housing
Supply voltage	24 V AC/DC (±5%)
Current consumption	max. 20 mA at 24 V DC
Alarm output	1 x potential-free change-over contact, 48 V, 1 A
Holding time	adjustable from 5 sec. up to 15 min. by 270° potentiometer
Electrical connection	screw terminals max. 1,5 mm²
Cable	1 m PVC cable
Cable gland	PG11 high-strength cable gland with strain relief
Protection type	Housing/electronic: IP65, Sensor: IP30
Working temperature	0...+50°C

General Technical Data p.189

BFD2/A

Mini-Motion sensor with infrared sensor for ceiling installation

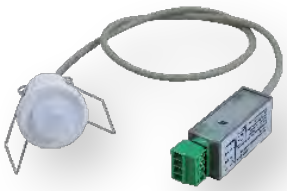

Measurand: motion
Output: normally open contact (closer)
Highlights: motion yes/no, normally-open contact, holding time 5 sec. up to 15 min.

Dimensional Drawing: p.355 #101 | Connection Drawing: p.313 #058 | Price Table: p.382

Measuring principle	alteration of position from persons and subjects with an temperature difference of > 3 K to the sensor
Measurement range motion	motion yes/no, apex angle 90°/110° on 360° range, reach 10 m
Response time (t90)	< 1 s
Sensor	infrared motion sensor
Sensor protection	mounted inside housing
Supply voltage	24 V AC/DC (±5%)
Current consumption	max. 20 mA at 24 V DC
Alarm output	potential-free normally open contact max. 48 V (100 mA)
Holding time	adjustable from 5 sec. up to 15 min. by 270° potentiometer
Electrical connection	screw/plug terminals max. 1,5 mm²
Cable	0,5 m PVC cable
Protection type	IP20
Working temperature	0...+50°C

General Technical Data p.189

Changer | 0-10 V | 4-20 mA | Modbus

BHA/A

Motion/brightness sensor with infrared sensor and photo-diode

Measurand: brightness, motion
Output: 0-10 V, Relay
Highlights: 4 measurement ranges, selectable mode
brightness-dependent movement detection

Dimensional Drawing: p.355 #102 | Connection Drawing: p.313 #059 | Price Table: p.382

Measuring principle	alteration of position from persons and subjects with an temperature difference of > 3 K to the sensor
Measurement range brightness	0-0,5 kLux, 0-1 kLux, 0-20 kLux, 0-50 kLux
Measurement range motion	motion yes/no, apex angle 90°/110° on 360° range, reach 10 m
Accuracy	±10% FS (20°C)
Temperature dependency	±5% FS / 10 K
Response time (t90)	< 1 s
Linearity inaccuracy	< ±5% final value
Offset	±10% from the selected measuring range by 270° potentiometer
Sensor	Motion: infrared sensor, Brightness: photodiode
Sensor protection	mounted inside housing
Running-in time	< 3 s
Supply voltage	24 V AC/DC (±5%)
Current consumption	typ. 25 mA at 24 V DC
Analogue output 0-10 V	3-wire connection
Alarm output	1 x potential-free change-over contact, 48 V, 1 A
Holding time	adjustable from 5 sec. up to 15 min. by 270° potentiometer
Threshold	threshold for brightness-dependent motion detection adjustable by 270° potentiometer
Electrical connection	screw terminals max. 1,5 mm²
Cable gland	PG11 high-strength cable gland with strain relief
Protection type	IP65
Working temperature	-20...+50°C

General Technical Data p.189

Changer | 0-10 V | 4-20 mA | Modbus

BHR/A

Motion/brightness sensor with infrared sensor and photo-diode for indoors

Measurand: brightness, motion
Output: 0-10 V, Relay
Highlights: 3 measurement ranges, selectable mode
brightness-dependent movement detection

Dimensional Drawing: p.356 #103 | Connection Drawing: p.313 #060 | Price Table: p.382

Measuring principle	alteration of position from persons and subjects with an temperature difference of > 3 K to the sensor
Measurement range brightness	0-0,5 kLux, 0-1 kLux, 0-20 kLux
Measurement range motion	motion yes/no, apex angle 90°/110° on 360° range, reach 10 m
Accuracy	±10% FS (20°C)
Temperature dependency	±5% FS / 10 K
Response time (t90)	< 1 s
Linearity inaccuracy	< ±5% final value
Offset	±10% from the selected measuring range by 270° potentiometer
Sensor	Motion: infrared sensor, Brightness: photodiode
Sensor protection	mounted inside housing
Running-in time	< 3 s
Supply voltage	24 V AC/DC (±5%)
Current consumption	typ. 25 mA at 24 V DC
Analogue output 0-10 V	3-wire connection
Alarm output	1 x potential-free change-over contact, 48 V, 1 A
Holding time	adjustable from 5 sec. up to 15 min. by 270° potentiometer
Threshold	threshold for brightness-dependent motion detection adjustable by 270° potentiometer
Electrical connection	screw terminals max. 1,5 mm²
Protection type	IP30
Working temperature	0...+50°C

General Technical Data p.189

Changer | 0-10 V | 4-20 mA | Modbus

BHT-D/A

Motion/brightness and temperature sensor for ceiling installation

Measurand: temperature, brightness, motion
Output: 0-10 V, Relay
Highlights: discreet ceiling mounting

Dimensional Drawing: p.356 #104 | Connection Drawing: p.314 #061 | Price Table: p.383

Measuring principle	alteration of position from persons and subjects with an temperature difference of > 3 K to the sensor
Measurement range brightness	0-1 kLux (0-0,5 kLux, 0-20 kLux, 0-50 kLux on request)
Measurement range motion	motion yes/no, apex angle 90°/110° on 360° range, reach 10 m
Measurement range temp.	0...+50°C
Accuracy	Lux: ±10% FS, Temp.: ±1 K
Temperature dependency	±5% FS / 10 K
Response time (t90)	Brightness/Motion: < 1 s, Temperature: < 60 s
Linearity inaccuracy	< ±5% final value
Offset	±10% from the selected measuring range by 270° potentiometer
Sensor	infrared motion sensor, photodiode, NTC10k
Sensor protection	mounted inside housing
Running-in time	< 3 s
Supply voltage	24 V AC/DC (±5%)
Current consumption	max. 40 mA at 24 V DC
Analogue output 0-10 V	3-wire connection
Alarm output	1 x potential-free change-over contact, 48 V, 1 A
Holding time	adjustable from 5 sec. up to 15 min. by 270° potentiometer
Threshold	threshold for brightness-dependent motion detection adjustable by 270° potentiometer
Electrical connection	screw/plug terminals max. 1,5 mm²
Protection type	IP20
Working temperature	0...+50°C

General Technical Data p.189

HFA/A

Brightness sensor with photo-diode

Measurand: temperature, brightness
Output: 0-10 V, 4-20 mA, passive sensor
Highlights: 8 lux measurement range, easy-to-install surface-mounted housing

Dimensional Drawing: p.356 #105 | Connection Drawing: p.314 #062 | Price Table: p.427

Measurement range brightness	0-0,5 kLux, 0-1 kLux, 0-2 kLux, 0-5 kLux, 0-10 kLux, 0-20 kLux, 0-50 kLux, 0-100 kLux
Measurement range temp.	0...+50°C
Accuracy	±10% FS (20°C)
Temperature dependency	±5% FS / 10 K
Response time (t90)	< 1 s
Linearity inaccuracy	< ±5% final value
Offset	±10% from the selected measuring range by 270° potentiometer
Sensor	Brightness: photodiode, Temperature: resistance sensor
Sensor protection	mounted inside housing
Running-in time	< 3 s
Supply voltage analog 0-10 V	24 V AC/DC (±5%)
Supply voltage analog 4-20 mA	15...36 V DC (Ubmin = 15 V + RLoad*0,02A)
Current consumption at 0-10 V	typ. 10 mA
Current consumption at 4-20 mA	max. 20 mA / output
Analogue output 0-10 V	3-wire connection, min. load resistance 100 kOhm
Analogue output 4-20 mA	2-wire connection (transmitter), max. RLoad(Ohm) = (+Ub - 15 V) / 0,02 A
Switching Hysteresis Relay	2% of the selected scaling (without display), 0,5...5% of the selected scaling adjustable (with display)
Electrical connection	screw terminals max. 1,5 mm²
Cable gland	PG11 high-strength cable gland with strain relief
Protection type	IP65
Working temperature	Electronic: -20...+50°C

General Technical Data p.189

HFR/A

Brightness sensor with photo-diode for indoors

Measurand: temperature, brightness
Output: 0-10 V, 4-20 mA, passive sensor
Highlights: 3 lux measurement ranges, modern housing design, on-wall or on flush-mounted box

Dimensional Drawing: p.357 #106 | Connection Drawing: p.315 #064 | Price Table: p.427

Measurement range brightness	0-0,5 kLux, 0-1 kLux, 0-20 kLux
Measurement range temp.	0...+50°C
Accuracy	±10% FS (20°C)
Temperature dependency	±5% FS / 10 K
Response time (t90)	< 1 s
Linearity inaccuracy	< ±5% final value
Offset	±10% from the selected measuring range by 270° potentiometer
Sensor	Brightness: photodiode, Temperature: resistance sensor
Sensor protection	mounted inside housing
Running-in time	< 3 s
Supply voltage analog 0-10 V	24 V AC/DC (±5%)
Supply voltage analog 4-20 mA	15...36 V DC (Ubmin = 15 V + RLoad*0,02A)
Current consumption at 0-10 V	typ. 10 mA
Current consumption at 4-20 mA	max. 20 mA / output
Analogue output 0-10 V	3-wire connection, min. load resistance 100 kOhm
Analogue output 4-20 mA	2-wire connection (transmitter), max. RLoad(Ohm) = (+Ub - 15 V) / 0,02 A
Switching Hysteresis Relay	2% of the selected scaling (without display), 0,5...5% of the selected scaling adjustable (with display)
Electrical connection	screw terminals max. 1,5 mm²
Cable gland	on the back or housing side (predetermined breaking point)
Protection type	IP30
Working temperature	0...+50°C

General Technical Data p.189

HFD/A

Brightness sensor with photo-diode for ceiling installation

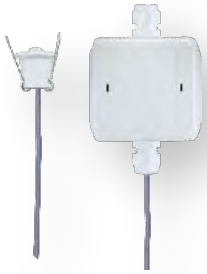

Measurand: temperature, brightness
Output: 0-10 V, 4-20 mA
Highlights: in the false ceiling by 2 tension springs, 8 lux measurement ranges, asy-to-install surface-mounted housing

Dimensional Drawing: p.357 #107 | Connection Drawing: p.314 #062 | Price Table: p.427

Measurement range brightness	0-0,5 kLux, 0-1 kLux, 0-2 kLux, 0-5 kLux, 0-10 kLux, 0-20 kLux, 0-50 kLux, 0-100 kLux
Measurement range temp.	0...+50°C
Accuracy	±10% FS (20°C)
Temperature dependency	±5% FS / 10 K
Response time (t90)	< 1 s
Linearity inaccuracy	< ±5% final value
Offset	±10% from the selected measuring range by 270° potentiometer
Sensor	Brightness: photodiode, Temperature: resistance sensor
Sensor protection	mounted inside housing
Running-in time	< 3 s
Supply voltage analog 0-10 V	24 V AC/DC (±5%)
Supply voltage analog 4-20 mA	15...36 V DC (Ubmin = 15 V + RLoad*0,02A)
Current consumption at 0-10 V	typ. 10 mA
Current consumption at 4-20 mA	max. 20 mA / output
Analogue output 0-10 V	3-wire connection, min. load resistance 100 kOhm
Analogue output 4-20 mA	2-wire connection (transmitter), max. RLoad(Ohm) = (+Ub - 15 V) / 0,02 A
Switching Hysteresis Relay	2% of the selected scaling (without display), 0,5...5% of the selected scaling adjustable (with display)
Electrical connection	screw terminals max. 1,5 mm²
Cable	1 m PVC cable
Cable gland	PG11 high-strength cable gland with strain relief
Protection type	Housing/electronic: IP65, Sensor: IP30
Working temperature	Electronic: -20...+50°C

General Technical Data p.189

Weather Stations

FS6001

The FS6001 weather station records the parameters of wind speed, precipitation (yes/no), brightness (east, south, west), temperature, humidity and nightfall depending on the design. The measured values are supplied as an analogue output signal and can be used to control external devices and / or record analogue measurement data.

Light direction and source

Brightness is recorded using thee independent photodiodes arranged in 90° segments (east/south/west), wherein each segment is assigned a voltage output 0-10V. They act linearly towards the brightness.

Preventing

The weather station is equipped with an electronically controlled heater to prevent condensation in winter.

DCF77 receiver

It also has a serial interface (RS 422/485) and a DCF77 receiver for time / date.

Compact design

Installation is simple and unobtrusive thanks to the compact design. All exterior parts are corrosion-resistant and made from high-quality plastic. The weather station ideally combines the sensors for the five most important parameters that are required for controlling and monitoring in building control systems, building services, awnings and blind control as well as greenhouse control.

FS6002

The FS6002 weather station is intended to record the most important meteorological parameters. Depending on the configuration, the device supplies the measurement data of wind speed and direction, air temperature, relative humidity, barometric pressure, precipitation and brightness.

Magnetic compass

A magnetic compass is integrated into all device variants in order to accurately determine the wind direction when the weather station is in mobile use.

GPS receiver

An in-built GPS receiver is also used to determine the exact universal time and geographic location.

Ultrasound measurement

The wind speed and wind direction is determined by the recording of the 2-dimensional horizontal components of ultrasonic measuring sections perpendicular to each other. Moreover, the acoustic virtual temperature can be calculated and output from the speed of sound. Owing to the measurement principle of ultrasonic run-time measurement, the device is especially suitable for inertia-free measurement of gusts of wind and peak values.

Micropore filter

Air temperature and relative humidity are measured using an integrated and accurate combination sensor, which is protected from damaging environmental influences by a micropore filter which is impermeable to water but lets in water vapour.

Integrated pressure sensor

Even the integrated pressure sensor based on MEMS (micro-electro-mechanical-system) technology is protected by such a filter.

Double radar

When measuring precipitation intensity, the precipitation is measured and calculated by the back-reflected signal of a double radar without contact. The intensity of an hour is extrapolated from that of the last minute for the output.

Light direction and source

Brightness is recorded using 4 photo sensors having a spectral sensitivity curve adapted to the sensitivity of the eyes and the direction of the light source is calculated using the intensities.

Heater

The weather station has an in-built heater. This largely prevents the device from icing up or being covered in snow.

Outputting data

Data output can be analogue as a standard signal and / or digital (MODBUS RTU). 8 analogue output channels (0-10 V) are available, 5 of which can optionally be universally configured.

FS6003

The FS6003 weather station has been developed for the diverse requirements of building control. The device combines precise measurement recording with a highly compact design. Straightforward integration into new and existing installations is guaranteed. The device can record a total of 11 meteorological parameters in the smallest of spaces.

Thermal anemometer

Wind measurement is carried out without moving parts. The thermal anemometer measures wind speed and direction without mechanical wear and tear. There is no laborious maintenance required.

Precipitation

A sensor coated in gold detects even small amounts of precipitation.

Heater

The in-built heater melts snow and sleet and ensures quick drying.

GPS receiver

The integrated GPS component automatically receives the date, time, station height and geographic location. There is no need to manually set the time.

Azimuth and altitude

The weather station uses the GPS parameters to record the azimuth and altitude of the position of the sun.

Barometric pressure

The reduced atmospheric pressure is calculated based on the height above sea level and the measured air pressure.

Outputting data

All parameters are output with the data telegram. Data are output serially via MODBUS RTU. The weather station is mounted directly on the building on a mast or using a wall mount.

FS6001

Weather station, active output (0-10 V)

Measurand: temperature, rel. humidity, brightness, precipitation, wind speed, twilight

Output: 0-10 V

Highlights: installation: niro-mounting bow for mast or wall fastening

Dimensional Drawing: S.357 #108

Price Table: S.425

Rain (yes)	0 V
Rain (no)	10 V
Measurement range wind speed	0-40 m/s, resolution 0,1 m/s
Measurement range temp.	-20...+60°C
Measurement range r.H.	0-100% r.H.
Measurement range brightness	Brightness East / South / West: each 0-100 kLux, Twilight: 0-250 Lux
Measurement range precipitation	yes/no
Accuracy	±2 K, ±3% r.H.
Sensor	Temperature: Pt100 1/3 DIN (DIN IEC 751), Precipitation: infrared light, Wind speed: reed-contact, Brightness: photodiode, Rel. humidity: capacitive humidity sensor
Supply voltage	16...28 V DC or 16...24 V AC
Current consumption	with heater: max. 250 mA, without heater: max. 150 mA
Analogue output	0-10 V
Electrical connection	PG cable clamb with 10 m LiYCY (PVC control cable, screened, UV resistant, 16x0,14 mm^2) (included)
Weight	1500 g
Protection type	IP54
Working temperature	-40...+60°C
Approvals	CE, EAC, RoHS

FS6002

Weather station with ultrasonic sensors, active output (0-10 V), digital output (Modbus RTU)

Measurand: temperature, rel. humidity, air pressure, brightness, precipitation, wind speed, wind direction

Output: Modbus RTU, 0-10 V

Highlights: doppler radar, ultrasonic sensor

Dimensional Drawing: S.358 #109

Price Table: S.425

Measurement range wind speed	0-60 m/s, resolution 0,1 m/s
Measuring range wind direction	0-360°, resolution 1°
Measurement range temp.	-40...+80°C, Auflösung 0,1 K
Measurement range r.H.	0-100% r.h., resolution 0,1% r.h.
Measurement range air pressure	500-1200 hPa, resolution 0,1 hPa
Measurement range brightness	0-150 kLux, resolution ca. 0,3% f. mv.
Measurement range precipitation	0-999 mm/h, resolution 0,001 mm/h
Accuracy wind speed	±0,3 m/s (< 5 m/s, rms - average over 360°), else ±3% f. measured value (rms - average over 360°)
Accuracy wind direction	±2,0° at ws > 2 m/s
Accuracy temperature	±0,3 K (25°C), ±1,0 K (-40...+80°C)
Accuracy humidity	±1,8% (10-90% r.H.), ±3% (0-100% r.H.)
Accuracy air pressure	±0,1 hPa (0...+65°C, 800-1100 hPa), ±1 hPa (-40...+65°C, 500-1200 hPa)
Accuracy brightness	±3% from relative measured value, ±2° in direct sunlight without cloud cover
Accuracy precipitation	At 95% of precipitation deviations smaller than 10% compared to laser precipitation monitor (reference)
Supply voltage	6...40 V DC or 10...28 V AC 50 Hz / 60 Hz (without heating), 24 V AC/DC ±15% (with heating)
Analogue output	0-10 V, resolution 16 bit
Digital output	Modbus RTU
Electrical connection	19-pole connector, cable 16 x 0,25 alternative 8 x 0,25 (cable not included)
Weight	ca. 900 g
Protection type	IP67
Working temperature	-40...+70°C
Storage temperature	-20...+70°C
Approvals	CE, EAC, RoHS

FS6003

Weather station compact, digital output (Modbus RTU)

Measurand: temperature, rel. humidity, air pressure, brightness, precipitation, wind speed, wind direction, twilight, Global measuring

Output: Modbus RTU

Highlights: GPS receiver with integrated RTC, sun position calculation

Dimensional Drawing: S.358 #110

Price Table: S.425

Measurement range wind speed	0-40 m/s, resolution 0,1 m/s
Measuring range wind direction	0-360°, resolution 1°
Measurement range temp.	-30...+60°C
Measurement range r.H.	0-100% r.h., resolution 0,1% r.h.
Measurement range air pressure	300-1100 hPa, resolution 0,01 hPa
Measurement range brightness	0-150 kLux, resolution 0,1 kLux
Measurement range twilight	0-999 Lux, resolution 1 Lux
Global measuring range	0-1300 W/m², resolution 1 W/m²
Measurement range precipitation	yes/no
Accuracy wind speed	±1 m/s (< 10 m/s, else ±5%, rms average over 360°)
Accuracy wind direction	±10° (laminar flow)
Accuracy temperature	±1 K (ws > 2m/s, -5...+25°C)
Accuracy air pressure	±0,5 hPa (20°C)
Accuracy brightness	±3%
Accuracy twilight	±10 Lux
Supply voltage	18...30 V DC, 18...28 V AC
Current consumption	< 300 mA @ 24 V DC
Digital output	Modbus RTU
Electrical connection	7-pole connector (cable 5x0,14 not included)
Weight	220
Protection type	IP65
Working temperature	-30...+60°C
Storage temperature	-20...+50°C
Approvals	CE, EAC, RoHS

Precipitation

NW1/O

The NW1/O precipitation monitor is used to record the beginning and end of precipitation as well as the length of precipitation periods. The precipitation monitor can also be used as a status indicator or signal generator for control for downstream safety devices for protection against precipitation, such as windows, ventilation flaps, blinds or awnings.

Light barrier system

Precipitation in the form of drizzle, rain, snow or hail is recorded by a light barrier system and generates a switch signal. An in-built event filter should stop the switch signal being generated as far as possible in the case of isolated events, such as leaves, bird droppings, insects etc. To this end, there must be at least n drops within 50 seconds. The number of drops (1... 15) can be adjusted on the circuit board using the DIP switch.

Switch-off delay

When the precipitation has stopped, the switch signal is reset after an adjustable switch-off delay. The start and end of the precipitation period can be precisely identified by directly assessing the events.

Heater

For extreme weather conditions, the precipitation monitor has a heater to prevent the surface of the housing from icing up or being covered in snow. For this purpose, the device is fitted with a regulated heater which maintains the surface temperature at > 0 °C.

MADE IN GERMANY

NW/O

The NW/O rain monitor is used as a signal generator for recording the start and end of precipitation. It is used as a status indicator or signal generator for control for downstream safety devices (controls) for protection for windows, ventilation flaps, blinds, awnings etc.

Glass passivated precipitation sensor

The sensor surface is a capacitor on glass-coated ceramics. Thanks to the glass passivation, the rain monitor is very environmentally resistant and robust with long-term stability and resistance to aggressive media. Precipitation that falls on the rain monitor and gets the sensor surface wet changes the surface's capacitance. This change generates a switch signal, i.e. a sensor surface which is wet signals the precipitation status "yes".

Condensation protection

The sensor surface is heated to an overtemperature of approx. 2 K for protection against condensation and icing. If the sensor surface gets wet, it is set to approx. 10 K above the ambient temperature, accelerating the drying. After drying, the device switches to the precipitation status "no".

NW1/O

Precipitation monitor with infrared light barrier system

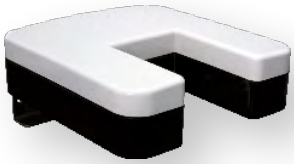

Measurand: precipitation
Output: Relay
Highlights: status of precipitation (rain, snow, hail, etc.)

Dimensional Drawing: S.359 #112

Price Table: S.444

Measuring principle	infrared light barrier
Measurement range precipitation	status of precipitation (rain, snow, hail, etc.)
Switch-on condition	1...15 incidences within 50 sec.
Switch-on delay	none
Sensor area	25 cm^2
Drop size	> 0,2 mm
Supply voltage	24 V AC/DC (±15%)
Current consumption	ca. 300 mA at 20°C ambient temperature; max. approx. 1 A
Alarm output	precipitation = relay OFF (also at UB = 0); no precipitation = relay ON
Switching load (relay)	max. 230 V AC/DC; 4 A
Switch-off delay	25...375 s
Electrical connection	5-polige terminal block and PG cable clamb (cable 5X0,5mm^2 LI9YC11Y black not included)
Weight	ca. 400 g
Protection type	IP65
Approvals	CE, EAC, RoHS

NW/O

Rain sensor

Measurand: precipitation
Output: Relay
Highlights: heated glass-coated ceramic, wall fastening

Dimensional Drawing: S.358 #111

Price Table: S.444

Rain (yes)	relay in resting position (also with UB = 0)
Rain (no)	relay in working position (tightened)
Measurement range precipitation	yes/no
Switch-on delay	< 0.5 s output signal, 15 s heating
Sensor area	18 cm²
Supply voltage	11...28 V AC or 1...32 V DC (max. 0,75 A)
Alarm output	potential-free change-over contact, max. 26 V AC / 36 V DC, 500 mA
Electrical connection	3 m cable LiYY 5 x 0,14 mm² (included)
Protection type	IP66
Working temperature	-30...+60°C
Storage temperature	-20...+50°C
Approvals	CE, EAC, RoHS

Wind

MADE IN GERMANY

Wind Speed

Our wind speed sensor is used to record the horizontal wind speed. The measured value is supplied as an analogue signal at the output. It can be transmitted to display devices, recording devices, data loggers as well as process control systems.

Heater

The sensor is equipped with an electronically controlled heater to prevent icing in winter.

Mains adaptor

The mains adaptor is used to supply electricity to the sensor and the heater.

Lightening protection

We recommend mounting a lightning rod in areas at risk of lightening.

Wind Direction

UOur wind direction sensors are used to measure the horizontal wind direction and convert this measurement value into a linear, analogue output signal. This signal can be transmitted to display devices, recording devices, data loggers as well as process control systems for further processing. Depending on the design, all essential parts are made of anodised aluminium and are additionally painted.

Easy assembly

The device is preferably mounted on a mast or a traverse.

Heater

The wind direction measuring device is fitted with an electronically controlled heater for winter operation to prevent freezing.

General Technical Data	
Analogue output	0-10 V, 4-20 mA
Protection type	IP55
Approvals	CE, EAC, RoHS

WG2/O

Wind speed transmitter - compact

Measurand: wind speed
Output: 0-10 V, 4-20 mA
Highlights: heated ball bearings

Dimensional Drawing: S.359 #113

Price Table: S.474

Measuring principle	opto-electronic
Measurement range wind speed	0-50 m/s
Accuracy	±0,5 m/s or ±3% f. mv
Accuracy	0,5 m/s
Survival speed	max. 80 m/s, 30 minutes
Supply voltage analog 0-10 V	13...30 V DC or 24 V AC/DC, max. 50 mA
Supply voltage analog 4-20 mA	9...30 V DC or 24 V AC/DC, max. 50 mA
Supply voltage heating	24 V DC/AC, max. 20 W
Working resistance for voltage output (V)	min. 1 KOhm
Working resistance for current output (mA)	max. 500 Ohm (for operating voltage > 15 V DC)
Electrical connection	PG cable clamb and 12 m cable LiYCY 6 x 0,25 mm² (included)
Material	Cup Star: Plastic with Carbon Fiber (PC-GF10), Base: Plastic (POM H2320)
Weight	400 – 750 g je nach Ausführung
Working temperature	-40...+70°C

General Technical Data S.210

WG/O

Wind speed transmitter - classic

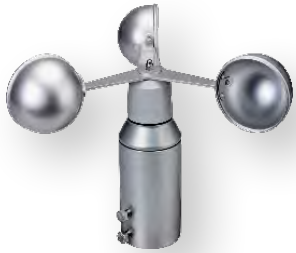

Measurand: wind speed
Output: 0-10 V, 4-20 mA
Highlights: heated ball bearings, cup star made of aluminum

Dimensional Drawing: S.359 #114

Price Table: S.474

Operating voltage with heating	24 V AC/DC ca. 20 W; electronically controlled
Operation voltage without heating	15 ... 24 V DC
Measurement range wind speed	0-50 m/s
Accuracy	±0,4 m/s rather to 2,5% f. mr
Running-in time	0,3 m/s
Wind load	at 35 m/s approx. 10 N
Distance constant	5 m
Max. load	60 m/s
Electrical connection	5-pole plug connection (cable 5X0,5mm² LI9YC11Y black not included)
Weight	ca. 1000 g

General Technical Data S.210

WRG2/O

Wind direction transmitter - compact

Measurand: wind direction
Output: 0-10 V, 4-20 mA
Highlights: heated ball bearings

Dimensional Drawing: S.360 #115

Price Table: S.474

Measuring principle	TMR sensor (Tunnel Magneto Resistance)
Measuring range wind direction	0-360°, resolution 1°
Survival speed	max. 80 m/s, 30 minutes
Supply voltage	8/15...30 V DC
Supply voltage heating	24 V DC/AC, max. 20 W
Electrical connec-tion	PG cable clamb and 12 m cable LiYCY 6 x 0,25 mm² (included)
Material	Wind vane: plastic with carbon fiber (PC-GF10), base: plastic (POM H2320)
Weight	ca. 300 g + 75 g / m Kabel

General Technical Data S.210

WRG/O

Wind direction transmitter - classic

Measurand: wind direction
Output: 0-10 V, 4-20 mA
Highlights: heated ball bearings, windvane made of aluminum

Dimensional Drawing: S.360 #116

Price Table: S.474

Measuring principle	TMR sensor (Tunnel Magneto Resistance)
Measuring range wind direction	0-360°, resolution 1°
Accuracy	±1,5°
Running-in time	< 0,6 m/s at 90° flag detection
Output attentua-tion	0,2-0,3
Supply voltage with heating	24 V AC/DC, max. 20 W
Wind load	at 35 m/s approx. 50 N
Max. load	60 m/s
Electrical connec-tion	5-pole plug connection (cable 5X0,5mm² LI9YC11Y black not included)
Weight	ca. 1800 g

General Technical Data S.210

Pyranometer

The GSM/O pyranometer records 100% of the solar spectrum in the range from 380 nm to 2800 nm and therefore comprises UV (ultraviolet radiation), VIS (visible radiation) and the part of the IR (infrared radiation).

Global radiation

Global radiation refers to the overall diffuse and direct solar radiation which strikes the earth's surface. The spectral range extends from the short-wave range of 300 nm (UV-B) to the long-wave range of 5000 nm (IR). In comparison with other spectral ranges, the measurement results provide information about medically and biologically relevant contexts.

Applications

The pyranometer is used in the fields of medical and biological research, in weather information and forecast systems, in climate research, in the agricultural sector and for general public information.

GSM/O

Pyranometer

Measurand: global radiation
Output: 0-10 V, 4-20 mA
Highlights: 2 screws M4 in the ground of housing

Dimensional Drawing: p.360 #117

Price Table: S.426

Global measuring range	0-1300 W/m², resolution 1 W/m²
Spectral range	380-2500 nm
Accuracy	±10% FS (20°C)
Linearity inaccuracy	< ±5% final value
Cosine correction	fault f2 <±3%
Sensor	thermocouple
Supply voltage	9...24 V DC or 14...24 V DC
Analogue output	0-10 V, 4-20 mA
Electrical connection	5-pole plug M12x1 with 5 m cable (included)
Material	Diffusor: PTFE, Dom: blown optical glass
Weight	ca. 300 g
Protection type	IP65
Working temperature	-20...+60°C
Approvals	CE, EAC, RoHS

Meteorology
Accessories

ZM/O

Price Table: p.474

Technical Data	
Article No. ZM/O-30	
Description	Traverse for 2 Wind Transmitter (Classic-Line) for joint installation of wind speed and wind direction sensor on a mast top
Material	aluminum, anodised
Pipe dimension	1 1/2 inches according to DIN 2448 (Ø 48.3 x 2.6 mm)
Sensor distance	Horizontal 0.6 m, Vertical 0.2 m
Mounting	bore Ø 71 x 74 mm
Dimensions	height 0.8 m
Weight	3000 g
Article No. ZM/O-35	
Description	Traverse for 1 wind generator (Compact-Line) for mounting wind speed or wind direction sensors on a facade
Material	aluminum
Assembly	screw fastening
Encoder distance	0.2 m
Weight	300 g
Article No. ZM/O-40	
Description	Traverse for 2 Wind Transmitter (Compact-Line) for joint installation of wind speed and wind direction sensor on a mast
Material	Traverse made of aluminum, mounting kit made of stainless steel V2A
Mounting	Mast with clamping range Ø 48-102 mm
Sensor distance	0.8 m, 0.4 m from the mast
Weight	300 g
Article No. ZM/O-50	
Description	Traverse short for 1 wind sensor (Compact-Line) for mounting wind speed or wind direction sensor on a mast
Material	Traverse made of aluminum, mounting kit made of stainless steel V2A
Mounting	Mast with clamping range Ø 48-102 mm
Sensor distance	0.4 m from the mast
Weight	300 g
Article No. ZM/O-60	
Description	Holder for 1 wind sensor (Compact-Line) for mounting wind speed or wind direction sensors on a surface, pole or pipe
Material	stainless steel V2A
Dimension	80 x 150 mm, hole for pipe diameter Ø 34 mm
Mounting	Mast with clamping range Ø 35-50 mm or wall surface
Weight	350 g
Article No. ZM/O-65	
Description	Mounting bracket for lateral fixing of the weather station FS6003 on a vertical surface, 250 x 42 mm

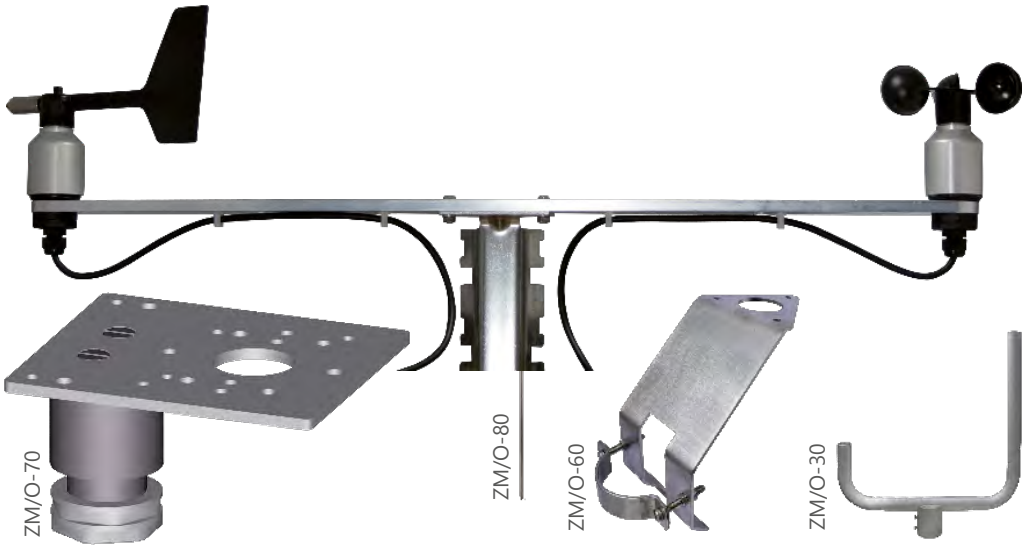

Technical Data	
Article No. ZM/O-70	
Description	Base plate with adapter for attaching pyranometer to a crossbeam
Material	aluminum, anodised
Dimension	100 x 115 x 65 mm
Weight	500 g
Article No. ZM/O-75	
Description	Spigot complete for transducer adaptation on traverses Compact
Material	POM
Dimensions	40 x 65 mm
Weight	100 g
Article No. ZM/O-76	
Description	Adapter/pin complete for transducer adaptation on traverses Compact
Material	aluminum
Dimension	40 x 75 mm
Weight	250 g
Article No. ZM/O-80	
Description	Lightning rod for additional attachment to a mast, pipe or crossbar to protect the wind transmitter from destruction by lightning strikes
Material	stainless steel
Dimension	height 560 mm
Weight	340 g
Article No. ZM/O-90	
Description	Connection cable for FS6002, 10 m FRNC 16 x 0.25 mm^2, open ends on the receiving side, shielded, halogen-free, UV-resistant
Article No. ZM/O-91	
Description	Connection cable for FS6003, 10 m, 7-pin, open ends on the receiving side, shielded, halogen-free, UV-resistant

DT/G

Digital display

Measurand: temperature
Output: -
Highlights: 3,5-digits display

Price Table: p.393

Measurement range temp.	-60...+199.9°C (Pt100), -50...+1150°C (NiCr-Ni)
Measurement input	Pt100 (2-wire), type k (NiCr-Ni)
Accuracy	Pt100: ±0.5°C ±1Digit (nominal temperature = 25°C); NiCr-Ni: ±1% ±1Digit (-20 up to +550°C and +920 up to +1150°C), ±1.5% ±1Digit (+550 up to +920°C)
Sampling rate	ca. 3 measurements/sec.
Supply voltage	8...20 V AC/DC or 18...29V DC (setting via soldering jumper)
Zero-point adjustment	The zero-point offset of the sensor can be adjusted by the spindle trimmer (only for Pt100 version) on the rear site of the device.
Electrical connection	4-pin screw-type/plug-in terminals for wire dias ranging from 0.14 up to 1.5 mm²
Current consumption	max. 20 mA
Panel cut-out	21,7 x 45 mm (H x W)
Weight	ca. 57 g
Protection type	front IP54 (with optional O-rings IP65)
Working range r.H.	0...98% r.H. in contaminant-free, non-condensing air
Working temperature	0...+50°C
Storage temperature	-20...+70°C
Accessories	optional O-rings for IP65, 2 pieces (not included in scope of supply)
Approvals	EN50081-1 and EN50082-2 (Pt100), EN50081-1 and EN50082-1 (NiCr-Ni); additional fault

BN/E

Bayonet nipple

Measurand: -
Output: -
Highlights: stainless steel

Dimensional Drawing: p.361 #118

Price Table: p.383

Thread	M10, M10x1, M12, M12x1, M14x1,5, G1/4 inch, G3/8 inch
Material	stainless steel 1.4305
Working temperature	-50...+350°C

KV/E

Compression Clamp

Measurand: -
Output: -
Highlights: moisture sealed rolled, 16 measuring ranges per device, 1 freely programmable measurement range

Dimensional Drawing: p.361 #119

Price Table: p.432

Thread	Outside thread: M6x1 (wrench size 12), M8x1 (wrench size 12), M10x1 (wrench size 12), G1/4 inch (wrench size 19) and G1/2 inch (wrench size 27)
Material	Compression Clamp: stainless steel V4A (1.4571); Clamp ring: stainless steel V4A 1.4571 (VA-clamping ring is not removable after tightening) or PTFE
Pressure resistance	VA-clamping ring: Pmax. 40 bar, PTFE-clamping ring: Pmax. 10 bar
Working temperature	VA clamping ring: -50...+500°C, PTFE clamping ring: -50...+250°C

MFL/E

Mounting flange

Measurand: -
Output: -
Highlights: aluminium, synthetic, incl. fastening screw

Dimensional Drawing: p.361 #120 | Price Table: p.436

Material	aluminium or synthetic
Working temperature	Plastic flange: -20...+80°C, aluminum flange: -20...+600°C

General Technical Data p.65

MUH/E

Pt100 temperature transducer 0-10 V / 4-20 mA for DIN rail mounting

Measurand: temperature
Output: 0-10 V, 4-20 mA
Highlights: snap-on mounting onto cap rail

Dimensional Drawing: p.362 #121 | Connection Drawing: p.315 #065 | Price Table: p.442

Scales	-50...0°C, -50...+50°C, -50...+150°C, -30...+20°C, -30...+70°C, -20...+50°C, -20...+80°C, -20...+120°C, -20...+150°C, -10...+15°C, 0...+50°C, 0...+100°C, 0...+150°C, 0...+200°C, 0...+250°C, +10...+35°C
Accuracy	±0,2 K + max. ±1,5% Span
Sensor	Pt100 DIN EN 60751 Kl. B (not in scope of delivery)
Supply voltage analog 0-10 V	24 V AC/DC (±5%)
Supply voltage analog 4-20 mA	15...36 V DC, depends on liability (Ubmin = 15 V + Rload*0,02A)
Current consumption at 0-10 V	typ. 10 mA
Current consumption at 4-20 mA	max. 20 mA / output
Analogue output 0-10 V	3-wire connection, min. load resistance 100 kOhm
Analogue output 4-20 mA	2-wire connection (transmitter), max. RLoad(Ohm) = (+Ub - 15 V) / 0,02 A
Electrical connection	screw terminals max. 2,5 mm²
Protection type	IP20
Protection class	III
Working range r.H.	0...98% r.H. in contaminant-free, non-condensing air
Working temperature	Electronic: -20...+70°C
Storage temperature	-20...+70°C
Approvals	CE, EAC, RoHS

MUB/E

Pt100 temperature transformer head form B 0-10 V / 4-20 mA

Measurand: temperature
Output: 0-10 V, 4-20 mA
Highlights: per circuit board (V1 / V2) 16 measurement ranges selectable by DIP-switch, 1 freely programmable measurement range

Dimensional Drawing: p.362 #122 | Connection Drawing: p.316 #066 | Price Table: p.442

Scales V1	-50...0°C, -50...+50°C, -50...+150°C, -30...+20°C, -30...+70°C, -20...+50°C, -20...+80°C, -20...+120°C, -20...+150°C, -10...+15°C, 0...+50°C, 0...+100°C, 0...+150°C, 0...+200°C, 0...+250°C, +10...+35°C
Scales V2	-200...0°C, -200...+100°C, -200...+200°C, -200...+400°C, -200...+600°C, -100...0°C, -100...+100°C, -100...+200°C, -100...+500°C, -80...+20°C, -50...+250°C, -50...+500°C, 0...+300°C, 0...+400°C, 0...+500°C, 0...+600°C
Accuracy	±0,2 K + max. ±1,5% Span
Sensor	Pt100 DIN EN 60751 Kl. B (not in scope of delivery)
Supply voltage analog 0-10 V	24 V AC/DC (±5%)
Supply voltage analog 4-20 mA	15...36 V DC, depends on liability (Ubmin = 15 V + Rload*0,02A)
Current consumption at 0-10 V	typ. 10 mA
Current consumption at 4-20 mA	max. 20 mA / output
Analogue output 0-10 V	3-wire connection, min. load resistance 100 kOhm
Analogue output 4-20 mA	2-wire connection (transmitter), max. RLoad(Ohm) = (+Ub - 15 V) / 0,02 A
Electrical connection	screw terminals max. 1,5 mm²
Protection type	IP00
Protection class	III
Working range r.H.	0...98% r.H. in contaminant-free, non-condensing air
Working temperature	Electronic: -20...+70°C
Storage temperature	-20...+70°C
Approvals	CE, EAC, RoHS

Changer | 0-10 V | 4-20 mA

MUD/E

Pt100 temperature transformer 0-10 V / 4-20 mA with double-PG housing

Measurand: temperature
Output: 0-10 V, 4-20 mA, 2 Relay
Highlights: tightened rod with copper core, easy to install with included mounting flange

Dimensional Drawing: p.362 #123 | Connection Drawing: p.317 #067 | Price Table: p.442

Scales	-50...0°C, -50...+50°C, -50...+150°C, -30...+20°C, -30...+70°C, -20...+50°C, -20...+80°C, -20...+120°C, -20...+150°C, -10...+15°C, 0...+50°C, 0...+100°C, 0...+150°C, 0...+200°C, 0...+250°C, +10...+35°C
Measurement range configuration	1 freely programmable measuring range via the menu input in the display (span min. 25K)
Accuracy	±0,2 K + max. ±1,5% Span
Sensor	Pt100 DIN EN 60751 Kl. B (not in scope of delivery)
Supply voltage analog 0-10 V	24 V AC/DC (±5%)
Supply voltage analog 4-20 mA	15...36 V DC, depends on liability (Ubmin = 15 V + Rload*0,02A)
Current consumption at 0-10 V	typ. 10 mA, 30 mA peak current consumption for 50 ms at switching moment at option relay
Current consumption at 4-20 mA	max. 20 mA / output, 40 mA peak current consumption for 50 ms at switching moment at option relay
Analogue output 0-10 V	3-wire connection, min. load resistance 100 kOhm
Analogue output 4-20 mA	2-wire connection (transmitter), max. RLoad(Ohm) = (+Ub - 15 V) / 0,02 A
Alarm output	2 x potential-free change-over contact, 48 V, 1 A
Switching Hysteresis Relay	Temperature: 2K (without display), 0,5...5K adjustable (with display)
Electrical connection	screw terminals max. 1,5 mm^2
Cable gland	PG11 high-strength cable gland with strain relief
Protection type	IP65
Protection class	III
Working range r.H.	0...98% r.H. in contaminant-free, non-condensing air
Working temperature	Electronic: -20...+70°C
Storage temperature	-20...+70°C
Approvals	CE, EAC, RoHS

ZT/E

Immersion sleeve

Measurand: -
Output: -
Highlights: brass sleeve Pmax. 16 bar, stainless steel sleeve Pmax. 40 bar

Dimensional Drawing: p.363 #124

Price Table: p.475

Material	Immersion sleeve: stainless steel VA 1.4404 or brass nickel plated
Pressure resistance	Immersion sleeve stainless steel: Pmax. 40 bar with G1/2 inch; Immersion sleeve brass: Pmax. 16 bar with R1/2 inch
Working temperature	Immersion sleeve stainless steel: Tmax. +600°C, Immersion sleeve brass: Tmax. +150°C

TH3/Z

Immersion sleeve with compression clamp

Measurand: -
Output: -
Highlights: Tmax +200°C, Messing Pmax. 16 bar, Edelstahl Pmax. 40 bar

Dimensional Drawing: p.363 #125

Price Table: p.467

Material	Immersion sleeve: stainless steel VA 1.4404 or brass nickel plated
Pressure resistance	Immersion sleeve stainless steel: Pmax. 40 bar with G1/2 inch; Immersion sleeve brass: Pmax. 16 bar with R1/2 inch
Working temperature	Immersion sleeve stainless steel: -60...+200°C, Immersion sleeve brass: -60...+150°C

ST/E

Connector

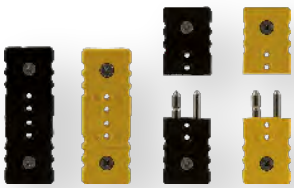

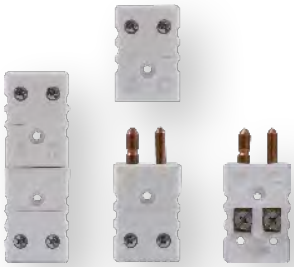

Measurand: -
Output: -
Highlights: Stecker männlich/weiblich, Mini-/ Standardgrösse, Keramikstecker bis +650°C

Price Table: p.463

Description	Connector for thermocouples type K (NiCr-Ni), type J (FeCu-Ni) and resistance thermometers according to IEC 584
Working temperature	Plastic plug: -50...+120°C, ceramic plug: -50...+650°C

SWS/A

Radiation and weather protection

Measurand: -
Output: -
Highlights: protection against precipitation, protection against radiation, easy mounting

Dimensional Drawing: p.363 #126

Price Table: p.464

Description	Radiation and weather protection, 127 x 115 mm, incl. mounting angle, only suitable for duct sensors
Weight	850 g

DTA/D

Adapter for pressure transmitters

Measurand: -
Output: -
Highlights: stainless steel, adapter G1/4 to G1/2 inch

Dimensional Drawing: p.364 #127

Price Table: p.393

Description	adapter G1/4 to G1/2 inch
Material	Stainless steel VA 1.4571

SAS/D

Hose connection set

Measurand: -
Output: -
Highlights: PVC, silicone, plastic-/ metal pipes

Price Table: p.462

Description	hose connection set for pressure transducers and pressure switches

ST

Venturi pipe for duct smoke detector

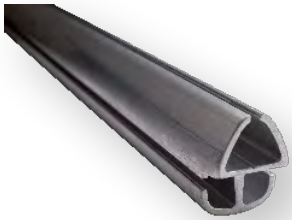

Measurand: -
Output: -
Highlights: improved venturi effect, longitudinal slots

Price Table: p.463

Description	Venturi pipe for duct smoke detector
Material	Aluminium

UG-B

Mounting bracket for duct smoke detector

Measurand: -
Output: -
Highlights: quick assembly, easily adapted by hand, galvanized steel

Price Table: p.470

Description	Mounting bracket for duct smoke detector
Material	galvanized steel

UG-COVER

Protective housing for duct smoke detector

Measurand: -
Output: -
Highlights: prevents condensation

Price Table: p.470

Description	Protective housing IP65 for duct smoke detector

SB/E

Snap-on mounting for DIN rails

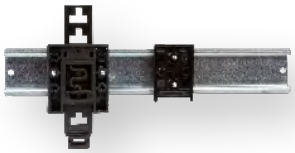

Measurand: -
Output: -
Highlights: snap-on mounting for DIN rails, industry housing

Dimensional Drawing: p.,364 #128
Price Table: p.463

Material	polyamide

SZ/E

Accessories

Measurand: -
Output: -
Highlights: tension band, heat transfer paste, sun protection, vandalism protection

Price Table: p.464

Material	Tension band: galvanized steel Ball shot protection: tempered plate sun protection: stainless steel V2A

Multi-Sensor-Measuring Devices
digital output

Our FS1600 multi-sensor measuring device can be individually assembled to measure any of the following variables: temperature, humidity (also heated), air pressure, differential pressure, air quality (CO, CO2, VOC, O2, fine dust), flow, brightness, and movement. The variables are converted into a digital output signal for transmission via Modbus RTU.

200 different combinations

The multi-sensor platform offers a compact all-in-one device for recording the most important environmental conditions with more than 200 configuration options.

Changeover contact

The measuring device can be expanded with a potential-free changeover contact, whose switch-on and switch-off values, delay, hold times, etc. can be defined via the corresponding register.

DIP switch technology

The address, transmission mode/speed, terminal resistor, and master/slave function of the bus devices can be configured conveniently using innovative DIP switch technology. This means that the devices can be quickly and easily integrated into the system and later parameterized via the master. (→page 241)

High-quality fittings

External sensors are protected against external influences with aluminium/stainless steel fittings.

Display

A 4 inch back-lit graphic LCD display shows all of the measured values and is freely programmable. Its user menu is also used to configure the measuring devices.

Piezo alarm buzzer

In addition to the graphical visualisation of the measured variable, a piezo can also be used to sound an alarm. It can be freely programmed using a register.

Cross-device functions

As a special function, a number of defined measured values of other bus users (also from different manufacturers) can be displayed. To display measured values from other bus users, these are entered by the bus master in the corresponding registers. The optional changeover contact can also be configured for measured values from other bus users. (→page 238)

10 times the transmission speed

By forming blocks, up to ten arbitrary registers can be read out simultaneously with just one read command. This saves you up to 90% transmission time! (→page 239)

Factory settings

The bus devices can be reset to the factory settings by the master during operation. The basic functionality of the device can thus be restored in a matter of seconds. This may be necessary if parameters such as offset, switching threshold, display modes, etc. are incorrect.

Easy assembly

Housings with innovative hinge locking technology and double PG (→page 32), sufficient terminal space, labelled circuit boards, and connection-friendly push-in clamps offer maximum ease of installation and speed.

Autonomous nodes

The FS master/slave topology can be used to set up inexpensive, autonomous nodes within the device series without an additional PLC master. In this case, a bus device would assume the master function in the node. This queries the measured values of other bus users, automatically enters them in its corresponding registers, and shows them in the internal display. The master can also evaluate and operate other actuators from the device series (analogue inputs and outputs, relay station).

Best quality

With high-quality components, modern serial production, automated testing/calibration setups, and a 100% final inspection, you will be getting a product with the „Made in Germany" guarantee of quality.

Application

The multi-sensor measuring devices are ideal for use in workplaces, production facilities, warehouses, medical facilities, or other industrial applications.

CO-Sensor (A1)	
Measurement range	0...1.000 ppm
Accuracy	±5 ppm + max. ±5% f. mv (at 20°C, 50% r.H.)
Temperature dependency	±5 ppm / K
Response time (t90)	< 5 min
Long term stability	±1% FS/year
Sensor	Electrochemical gas sensor
CO2-Sensor (A2, A22, A23)	
Measurement range A2	0...10.000 ppm
Measurement range A22	0...20.000 ppm
Measurement range A23	0...50.000 ppm
Accuracy	±50 ppm + 2% v. MW at 0-2000 ppm, ±50 ppm + 3% v. MV at 0-5000 ppm, else ±100 ppm + 5% v. MV (at 20°C, 1013 mbar, auto calibration ON)
Temperature dependency	±5 ppm / K
Druckabhängigkeit	compensated if option "air pressure sensor" is selected, else 1.6% of the me-assurement value / kp difference to 1013mbar
Response time (t90)	< 1 min
Long term stability	±1% FS/year
Sensor	Nondispersive infrared sensor (NDIR)
Automatic calibration	The automatic drift compensation takes place in the interval of 7 days. This ensures an excellent long-term stability. The device must be supplied with fresh air within this interval (during continuous operation) for at least 10 minutes. This function can
Manual calibration	Manual adjustment to 400 ppm can be executed via registry-command.
Oxygen sensor (A31, A32)	
Measurement range oxygen A31	0...25% vol.
Measurement range oxygen A32	0...100% vol.
Accuracy	±5 µg/m³ + max. ±4% FS (@ 20°C, 45% r.H., 1013 mbar)
Temperature dependency	±1% FS / 10 K
Long term stability	±0,2% FS/year at auto calibration ON
Response time (t90)	<1s
Air quality sensor for mixed gas -VOC (A4)	
Measurement range VOC	0-100% (good / bad air quality, referring to the calibration gas)
Accuracy	± 10% FS (at 20°C, 50% r.H. and auto-calibration ON)
Temperature dependency	±0,2% FS/K
Response time (t90)	< 1 min
Long term stability	±5% FS/year (auto-calibration ON)
Sensor	metal oxide VOC-sensor
Automatic calibration	The automatic drift compensation takes place in the interval of 7 days. This ensures an excellent long-term stability. The device must be supplied with fresh air within this interval (during continuous operation) for at least 10 minutes. This function can
Manual calibration	Manual zeropoint can be setted via registry-command to 10%
Sensitivity	Sensitivity can be varied at three levels via registry-command to 10%
Particulate Matter Sensor PM2.5/PM10 (A51)	
Measurement range particulate matter	0 µg/m³ ... 1000 µg/m³
Accuracy	±5 µg/m³ + max. ±4% FS (@ 20°C, 45% r.H., 1013 mbar)
Temperature dependency	±1% FS / 10 K
Long term stability	±1% FS/year
Response time (t90)	<1s

Flow transducer (F11 or F12 - with pendulum sensor, mounting flange within scope of delivery)	
Measuring principle	calorimetric measuring method
Measurement range flow F11	0...5 m/s
Measurement range flow F12	0...20 m/s
Calculation air flow F11	0-50.000 m^3/h, formula and parameters via registry
Calculation air flow F12	0-200.000 m^3/h, formula and parameters via registry
Accuracy	±0,3 m/s + max. ±4% FS (@ 20°C, 45% r.H., 1013 mbar)
Temperature dependency	±1% FS/ 10 K
Long term stability	±1% FS/year
Response time (t90)	<1s
operating range F11	0,3...5 m/s
operating range F12	0,3...20 m/s
Humidity / temperature transducer (H1T1 or H2T1 - heated temporarily or permanently)	
Measurement range r.H.	0-100% r.H.
Accuracy humidity	±3% r.H. (30-70% r.H., else ±5% r.H., at 20°C)
Measurement range temperature	-20°C...50°C
Accuracy temperature	±0,5 K
Calculated thermodynamic values	dew point temperature, abs. humidity, air fuel ratio, enthalpy, wet bulb temperature, vapour pressure
Long term stability	±1% FS/year
Sensors	Combined humidity and temperature sensor
Sensor protection high-humidity range H1T1	condensation protection by heating function at more than 95% r.H. (holding function of the meassured values during heating function).
Sensor protection high-humidity range H2T1	Kondensationsschutz durch Dauerheizung ca. 3 K über Umgebungstemperatur
Flow rate	< 2 m/s
Motion Sensor (M1)	
Measurement range motion	motion yes/no, apex angle 90°/110° on 360° range, reach 10 m
Response time (t90)	< 1 s
Sensor	infrared motion sensor MTS 10/360, photodiode
Pressure Sensor (P2 oder P22 oder P23)	
Measurement range pressure P2	-100...+100 Pa
Measurement range pressure P22	-500...+500 Pa
Measurement range pressure P23	-5000...+5000 Pa
Calculation air flow P2	0...4.000 m^3/h of the differential pressure uo to 100Pa, formula and parameters via registry
Calculation air flow P22	0...20.000 m^3/h of the differential pressure uo to 500Pa, formula and parameters via registry
Calculation air flow P23	0...200.000 m^3/hof the differential pressure uo to 5000Pa, formula and parameters via registry
Accuracy	Difference pressure
Temperature dependency	Difference pressure
Linearity inaccuracy	Difference pressure / Air Pressure
Offset	can be set at the registry
Output attentuation	can be set at the registry
Pressure resistance	5-times of measurement range
Manual zero-point adjustment	Manual zero-point adjustment can be executed
Air Pressure Sensor (P4)	
Measurement range atmospheric / barometric pressure	500-1150 mbar
Accuracy	±3 mbar (at 20°C)
Temperature dependency	1 mbar / 10 K
Linearity inaccuracy	±1% FS
Offset	can be set at the registry
Output attentuation	can be set at the registry

General	
Supply voltage	24V DC +/-5%
Current consumption	typically 100 mA, (depending on MODBUS parameters and selected backlight) plus around 20ma/sensor
Digital output	Modbus RTU
Electrical connection	push-in terminal, no tools required, time-saving
Display	programmable display at 3 levels, customer-specific interfaces optional
Housing	Polycarbonate PC UL 94 V0 with hinge locks, color light grey
Cable gland	Cable connection 12mm with stain relief
Dimensions	Housing
Alarm transmitter (piezo)	freely programmable, volume approx. 85db at a distance of 10cm
Protection type Housing/electroic	IP65 (IP20 at option particulate matter and/or CO2)
Protection type sensor attachments	IP30
Protection class	III
Sensor protection	(1) r. / Temp, VOC, CO2
Working- and Storage temperature	-20...+50°C
Range of application	Ambient air monitoring, pollution-free, non-condensing air up to max. 98% r.H. (except harmful gases in accordance with sensor specifications)
Attachments at the device	V2A tubes and/or V2A sinter filter
Option clamping connectors / screw connectors	Steel M12 industrial standard
special features	When calculating different sizes, depending on the selected sensor configuration, air pressure, air density, etc. are included. If these values are not available internally from sensors, they can be entered by the Modbus master into the corresponding regi

Multi-Sensor-Measuring Devices
Ordering matrix

Basic unit				min. 4 Sensors												Display
FS1600	-	MBR	-	A1	A2	A31	A4	A51	F11	H1	M1	P2	P4	T1	-	D
					A22	A32			F12	H2		P22				
					A23							P23				

always in combination

Description		Prices
FS1600-MBR Basic Unit		362,50 €
CO sensor	A1	75,00 €
CO2 sensor 0-10000 ppm	A2	87,50 €
- or CO2 sensor 0-20000 ppm	A22	87,50 €
- or CO2 sensor 0-50000 ppm	A23	87,50 €
O2 oxygen sensor 0-25% vol.	A31	143,75 €
- or O2 oxygen sensor 0-100% vol.	A32	143,75 €
VOC sensor	A4	75,00 €
PM2.5/PM10 particulate matter 0 µg/m³ ... 1000 µg/m³	A51	100,00 €
Flow sensor 0-5 m/s	F11	106,25 €
- or flow sensor 0-20 m/s	F12	106,25 €
Humidity/Temperature sensor	H1T1	75,00 €
Humidity/Temperature sensor - permanently heated	H2T1	143,75 €
Motion sensor	M1	56,25 €
Differential pressure +/-100 Pa	P2	100,00 €
- or Differential pressure +/-500 Pa	P22	75,00 €
- or Differential pressure +/-5000 Pa	P23	75,00 €
Air pressure sensor	P4	62,50 €

Hints:
- at least 4 sensors
- always with display
- Humidity / temperature always in combination

Some combinations are not possible:
- Oxygen cannot be combined with CO2, VOC
- optionally with aluminum housing and M12 connectors

Modbus RTU

Modbus RTU is a communication protocol based on a master/slave or client/server architecture. The primary aim of the protocol is to enable simple, reliable, and fast communication between automation and field devices.

Open source

The protocol was created in 1979 for programmable logic controllers and is freely available to the market. The manufacturer-neutral data structure enables devices from different manufacturers to be used with one another.
In fact, all tasks such as measuring, regulating, switching, and monitoring can be performed with the Modbus communication protocol. This reduces the need for specialised and parallel BUS lines.

De-facto standard

Due to its simplicity and extensive range of possible applications, the Modbus protocol has established itself as the de facto standard in automation, building technology, and industry.

Modbus RTU

Most of the control components can be connected with Modbus RTU. Self-contained systems, whether in system control, home automation, or modules such as ventilation units, heat pumps, or heating systems, are usually implemented with Modbus RTU.

Advantages:
- Standardized, lean data exchange according to established norms
- Fast data transmission
- Technology and manufacturer independent
- Reduced and time-saving installation compared to conventional cabling

RS485 interface

Cable lengths of up to 1200 metres can be used with the RS485 interface. In comparison, the cable length for RS232 is limited to 15 metres.

Advantages:
- Asynchronous serial transmission
- less prone to disruption than conventional transmissions
- Cable length up to 1200 metres

FS1000-Series

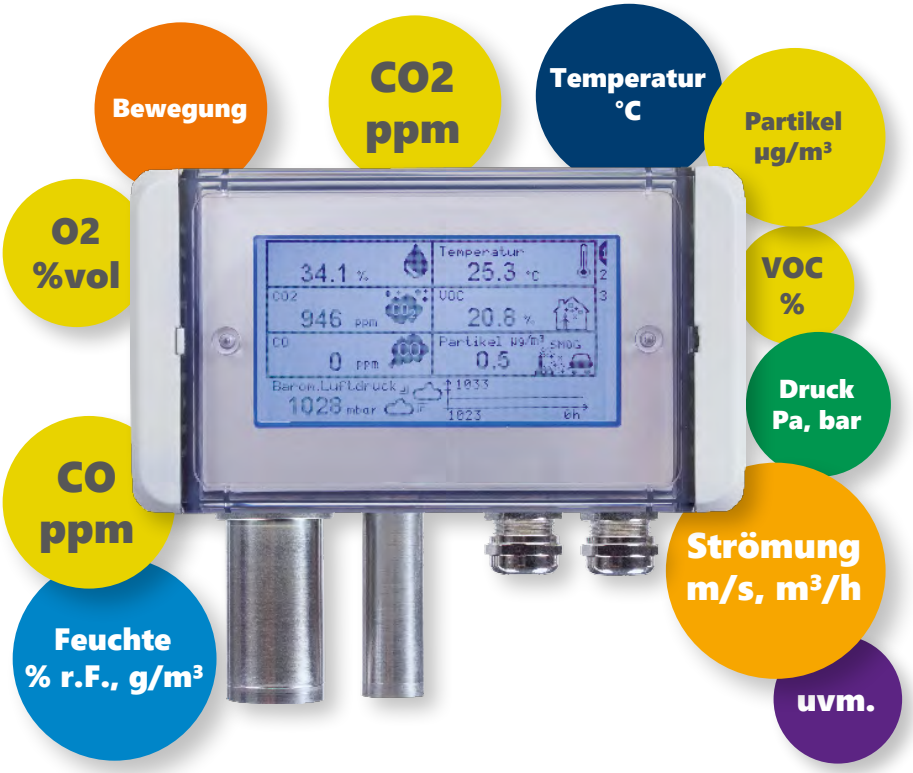

Our FS1000 series is a multi-sensor measuring device that can simultaneously measure up to 8 environmental conditions, such as temperature, humidity, pressure, air quality (CO, CO_2, VOC, O_2, fine dust), flow, brightness, movement, etc.
The variables are converted into a digital output signal for transmission via Modbus RTU.

DIP switch technology

The address, transmission mode/speed, terminal resistor, and master/slave function of the bus devices can be configured conveniently using innovative DIP switch technology. This means that the devices can be quickly and easily integrated into the system and later parameterized via the master.

Cross-device display of measured values

In addition to its own measured values, the recorded measured values of other Modbus participants can be displayed on each slave, even across manufacturers!
A device name is assigned to the source

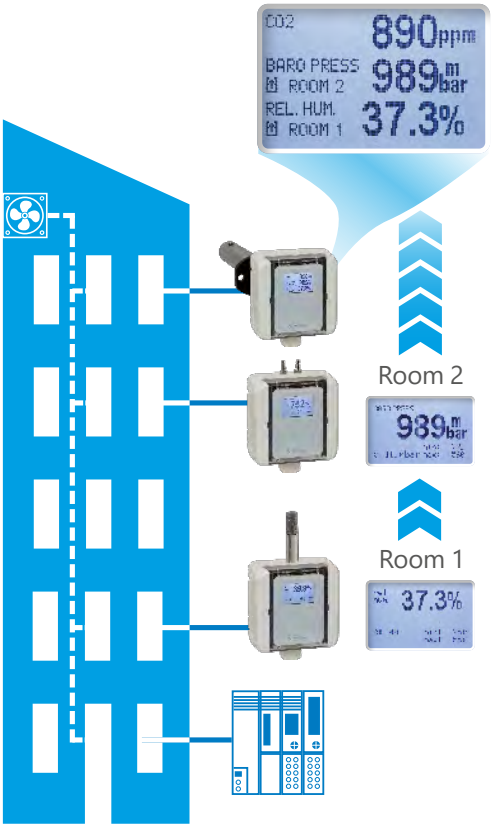

device via the Modbus master and the target device on which the measured values are to be displayed. The display mode can be freely defined on the target device (alternating, 1 to n values in parallel, etc.).

Cross-device actuator control

Each device is optionally equipped with a relay and can also be used as an actuator. It is possible to control the relay of another slave using the measured values of any device and switch a ventilation system on/off, for example.

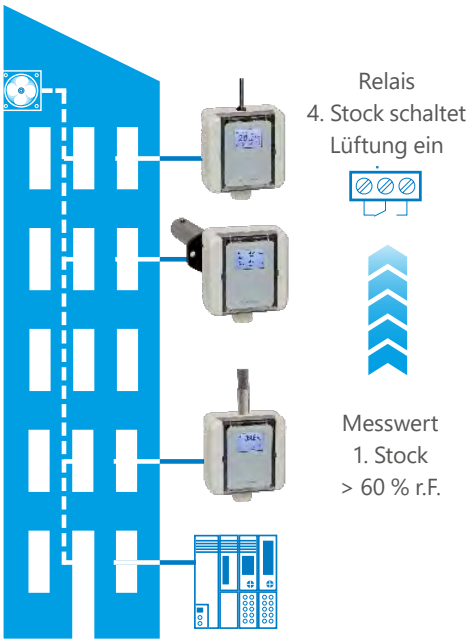

Factory setting

If unexpected communication problems occur in one of the measuring devices after a parameterization has been carried out, the slave can be reset to the factory settings by the master using the BUS command during operation.

Advantages:

- Quick problem solving on site
- The measuring device can remain in operation
- In-house reset

Autonomous nodes

Due to the well thought-out and future-proof hardware and software, our FS1000 series can be used to implement large projects as well as small autonomous nodes without the use of a PLC.

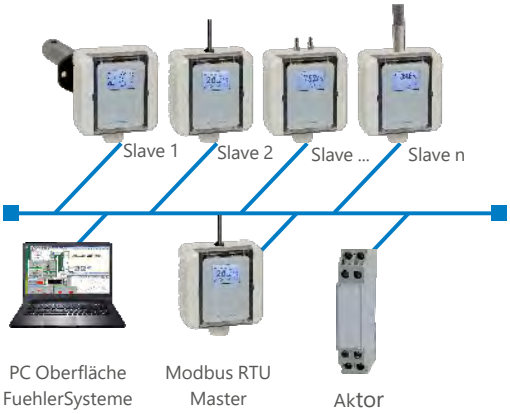

Every device from our FS1000 series has a master/slave function. With this, any Modbus participant can be defined as the master. The measuring device defined as Modbus master can be configured via a PC interface or via the display menu. For example, the values measured by the slaves can be queried and displayed or actuators can be controlled.
With the FS1000 series, small autonomous nodes can be implemented cost-effectively without a PLC.

10 times the transmission speed

By forming blocks, up to ten arbitrary registers can be read out simultaneously with just one read command.

Advantage:

- This saves you up to 90% transmission time!

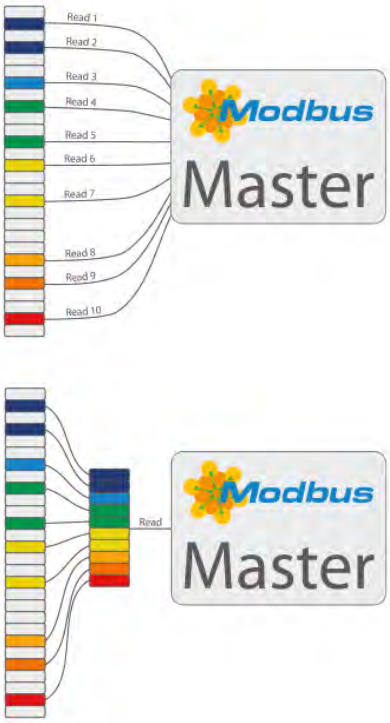

Cross-device air pressure compensation

The measurement accuracy depends, among other things, on environmental conditions such as humidity, temperature, or air pressure.
In order to guarantee a high level of accuracy, our CO_2 Modbus measuring devices are equipped with cross-device air pressure compensation. For this purpose, the Modbus master transfers the prevailing atmospheric pressure recorded in its register to the to the CO_2 Modbus slave, which then carries out the air pressure compensation.

Advantage:

- High measuring accuracy by compensating for humidity/temperature/air pressure.

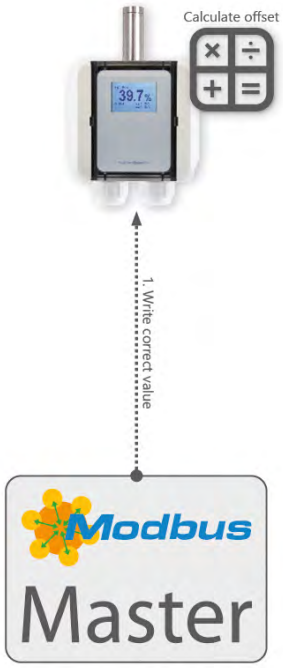

Automatic offset calculation

In order to correct the measured value of a Modbus slave, the difference between the actual and measured values is usually calculated by the Modbus master and transferred to it. The offset calculation can also be carried out directly by the Modbus slave and the Modbus master simply transfers the actual value to the device.

Advantage:

- Very fast actual value transfer to several Modbus slaves possible.

Parameterization via DIP

Bus address

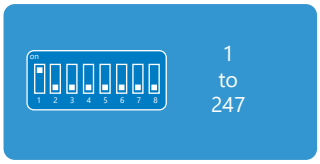

Master/Slave function

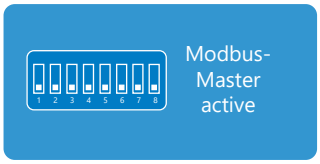

8N1-Mode

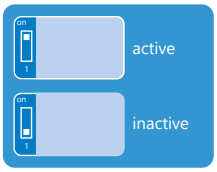

Stop bits

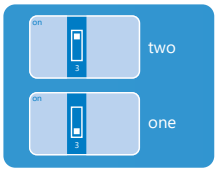

Baud rate

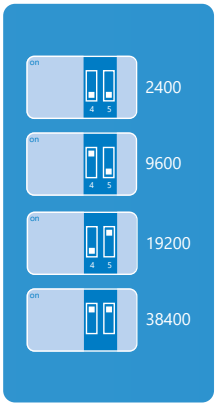

Parity

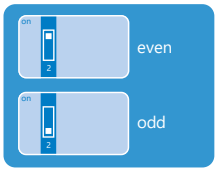

Terminator

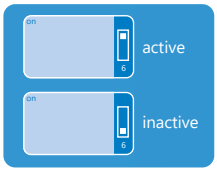

Temperature Transducers
digital output

Our temperature transducers record the ambient temperature via a Pt100 resistance sensor and convert the measured value into a digital output signal for transmission via Modbus RTU.

Changeover contact

The measuring devices can be expanded with a potential-free changeover contact, whose switch-on and switch-off values, delay, hold times, etc. are defined via the corresponding register.

DIP switch technology

The address, transmission mode/speed, terminal resistor, and master/slave function of the bus devices can be configured conveniently using innovative DIP switch technology. This means that the devices can be quickly and easily integrated into the system and later parameterized via the master. (→page 241)

Read/write register

The min/max interval, the relay switching hysteresis, offset values, scalings, various display options (brightness, contrast, display mode, smileys), mean values, etc. can be set using the write command under the respective registers.

Display

The optional backlit LCD display is used to display actual values, min/max values, switching thresholds, relay states, and can be rotated every 90°.

10 times the transmission speed

By forming blocks, up to ten arbitrary

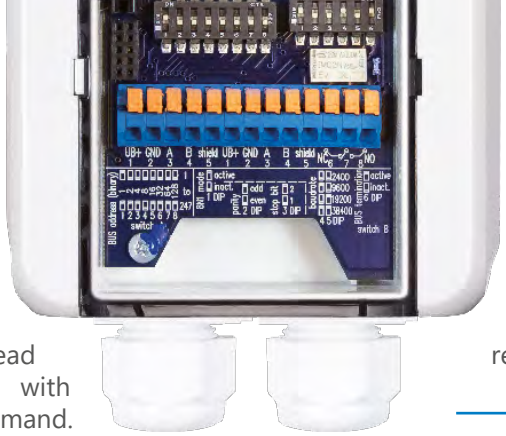

registers can be read out simultaneously with just one read command. This saves you up to 90% transmission time! (→page 239)

Cross-device functions

As a special function, a number of defined measured values of other bus users (also from different manufacturers) can be displayed. To display measured values from other bus users, these are entered by the bus master in the corresponding registers. The optional changeover contact can also be configured for measured values from other bus users. (→page 238)

Factory settings

The bus devices can be reset to the factory settings by the master during operation. The basic functionality of the device can thus be restored in a matter of seconds. This may be necessary if parameters such as offset, switching threshold, display modes, etc. are incorrect.

Easy assembly

Housings with innovative hinge locking technology and double PG (-> page xy), sufficient terminal space, labelled circuit boards, and connection-friendly push-in clamps offer maximum ease of installation and speed.

Best quality

With high-quality components, modern serial production, automated testing/calibration setups, and a 100% final inspection, you will be getting a product with the „Made in Germany" guarantee of quality.

Allgemeine Technische Daten	
Accuracy	±0,2 K + max. ±1% mv (-30...+100°C), else ±0,3 K + max. ±1,5% mv
Offset	can be entered in the register
Sensor	Pt100 DIN EN 60751 Cl. B
Supply voltage	24 V DC (±5%)
Current consumption	max. 20 mA + 30 mA (option display) + 20 mA (option relay)
Digital output	Modbus RTU
Alarm output	1 x potential-free change-over contact, 48 V, 1 A
Switching Hysteresis Relay	can be entered in the register
Electrical connection	push-in terminal, no tools required, time-saving
Protection class	III
Working range r.H.	0...98% r.H. in contaminant-free, non-condensing air
Storage temperature	-20...+70°C
Approvals	CE, EAC, RoHS

FS1001

Temperature transducer on-wall installation, digital output

Measurand: temperature
Output: Modbus RTU, Relay
Highlights: easy-to-install surface-mounted housing, optional LCD-Display

Dimensional Drawing: p.362 #123 | Connection Drawing: p.317 #068 | Price Table: p.399

Measurement range temp.	-20...+70°C
Cable gland	PG11 high-strength cable gland with strain relief
Protection type	IP65
Working temperature	Electronic: -20...+70°C

General Technical Data p.243

FS1002

Temperature transducer on-wall installation with sleeve, digital output

Measurand: temperature
Output: Modbus RTU, Relay
Highlights: 16 measuring ranges per device

Dimensional Drawing: p.364 #129 | Connection Drawing: p.317 #068 | Price Table: p.400

Measurement range temp.	-20...+70°C
Cable gland	PG11 high-strength cable gland with strain relief
Material	Protection sleeve: stainless steel VA 1.4571
Protection type	IP65
Working temperature	Probe: -50...+90°C, Electronic: -20...+70°C

General Technical Data p.243

FS1021

Temperature transducer duct with mounting flange, digital output

Measurand: temperature
Output: Modbus RTU, Relay
Highlights: easy to install with included mounting flange

Dimensional Drawing: p.329 #022 | Connection Drawing: p.317 #068 | Price Table: p.400

Measurement range temp.	-30...+150°C
Cable gland	PG11 high-strength cable gland with strain relief
Material	Protection sleeve: stainless steel VA 1.4571
Protection type	IP65
Working temperature	Probe: -30...+150°C, Electronic: -20...+70°C

General Technical Data p.243

FS1022

Temperature transducer duct with brass immersion sleeve, digital output

Measurand: temperature
Output: Modbus RTU, Relay
Highlights: thread R1/2 inch, Pmax 16bar

Dimensional Drawing: p.365 #130 | Connection Drawing: p.317 #068 | Price Table: p.400

Measurement range temp.	-30...+150°C
Cable gland	PG11 high-strength cable gland with strain relief
Material	Protection sleeve: stainless steel VA 1.4571, Immersion sleeve: brass nickel-plated, Pmax. 16 bar
Protection type	IP65
Working temperature	Probe: -30...+150°C, Electronic: -20...+70°C

General Technical Data p.243

FS1023

Temperature transducer duct with stainless steel immersion sleeve, digital output

Measurand: temperature
Output: Modbus RTU, Relay
Highlights: thread G1/2 inch, , Pmax 40bar

Dimensional Drawing: p.365 #131 | Connection Drawing: p.317 #068 | Price Table: p.401

Measurement range temp.	-30...+150°C
Cable gland	PG11 high-strength cable gland with strain relief
Material	Protection sleeve: stainless steel VA 1.4571, Immersion sleeve: stainless steel VA 1.4404, Pmax. 40 bar
Protection type	IP65
Working temperature	Probe: -30...+150°C, Electronic: -20...+70°C

General Technical Data p.243

FS1030

Temperature transducer with average value sensor, digital output

Measurand: temperature
Output: Modbus RTU, Relay
Highlights: tightened rod by copper core, easy to install with included mounting flange and mounting clamps

Dimensional Drawing: p.330 #026 | Connection Drawing: p.317 #068 | Price Table: p.401

Measurement range temp.	-30...+80°C
Cable gland	PG11 high-strength cable gland with strain relief
Material	Rod: copper (oxidation protective coating, black)
Protection type	IP65
Working temperature	Probe: -30...+80°C, Electronic: -20...+70°C

General Technical Data p.243

FS1040

Temperature transducer with cable sensor silicon cable, digital output

Measurand: temperature
Output: Modbus RTU, Relay
Highlights: easy-to-install surface-mounted housing with cable sensor

Dimensional Drawing: p.365 #132 | Connection Drawing: p.317 #068 | Price Table: p.401

Measurement range temp.	-50...+180°C
Cable	2 m silicone cable (max. +180°C)
Cable gland	PG11 high-strength cable gland with strain relief
Material	Protection sleeve: stainless steel VA 1.4571
Protection type	IP65, IP67 (probe, moisture sealed rolled)
Working temperature	Probe: -50...+180°C, Electronic: -20...+70°C

General Technical Data p.243

FS1041

Temperature transducer with cable sensor PTFE-cable, digital output

Measurand: temperature
Output: Modbus RTU, Relay
Highlights: easy-to-install surface-mounted housing with cable sensor

Dimensional Drawing: p.365 #132 | Connection Drawing: p.317 #068 | Price Table: p.402

Measurement range temp.	-50...+250°C
Cable	2 m PTFE cable (2x0,22 mm², max. +260°C)
Cable gland	PG11 high-strength cable gland with strain relief
Material	Protection sleeve: stainless steel VA 1.4571
Protection type	Gehäuse: IP65, Fühler: IP67 (feuchtedicht rolliert)
Working temperature	Probe: -70...+250°C, Electronic: -20...+70°C

General Technical Data p.243

FS1042

Temperature transducer with radiation sensor, digital output

Measurand: temperature
Output: Modbus RTU, Relay
Highlights: aluminium globe, measuring of the thermal radiation

Dimensional Drawing: p.366 #133 | Connection Drawing: p.317 #068 | Price Table: p.402

Measurement range temp.	-30...+75°C
Cable	2 m PVC cable (max. +105°C)
Cable gland	PG11 high-strength cable gland with strain relief
Material	Globe: aluminium (black)
Protection type	IP65 (housing), IP54 (probe)
Working temperature	Probe: -30...+75°C, Electronic: -20...+70°C

General Technical Data p.243

FS1043

Temperature transducer with pendulum sensor stainless steel, digital output

Measurand: temperature
Output: Modbus RTU, Relay
Highlights: stainless steel pendulum

Dimensional Drawing: p.366 #134 | Connection Drawing: p.317 #068 | Price Table: p.402

Measurement range temp.	-30...+100°C
Cable	2 m PVC cable (max. +105°C)
Cable gland	PG11 high-strength cable gland with strain relief
Material	Protection sleeve: stainless steel VA 1.4571
Protection type	IP65
Working temperature	Probe: -30...+105°C, Electronic: -20...+70°C

General Technical Data p.243

FS1050

Temperature transducer with self-adhesive surface sensor, digital output

Measurand: temperature
Output: Modbus RTU, Relay
Highlights: aluminium contacting block, incl. self-adhesive mounting cap

Dimensional Drawing: p.366 #135 | Connection Drawing: p.317 #068 | Price Table: p.403

Measurement range temp.	-20...+105°C
Cable	2 m PVC cable (max. +105°C)
Cable gland	PG11 high-strength cable gland with strain relief
Material	Contacting block: aluminium
Protection type	IP65
Working temperature	Probe: -20...+105°C, Electronic: -20...+70°C

General Technical Data p.243

FS1051

Temperature transducer with surface sensor and stainless steel block, digital output

Measurand: temperature
Output: Modbus RTU, Relay
Highlights: stainless steel block

Dimensional Drawing: p.367 #136 | Connection Drawing: p.317 #068 | Price Table: p.403

Measurement range temp.	-40...+250°C
Cable	2 m glass fibre/stainless steel netting (2x0,22 mm², max. +400°C)
Cable gland	PG11 high-strength cable gland with strain relief
Material	Contacting block: stainless steel VA 1.4571
Protection type	IP65 (housing), IP54 (probe)
Working temperature	Probe: -40...+400°C, Electronic: -20...+70°C

General Technical Data p.243

FS1052

Temperature transducer with magnetic surface sensor, digital output

Measurand: temperature
Output: Modbus RTU, Relay
Highlights: magnetic adhesive force 90 N

Dimensional Drawing: p.367 #137 | Connection Drawing: p.317 #068 | Price Table: p.403

Measurement range temp.	-40...+250°C
Cable	2 m silicone cable (max. +180°C)
Cable gland	PG11 high-strength cable gland with strain relief
Protection type	IP65 (housing), IP54 (probe)
Working temperature	Probe: -40...+400°C, Electronic: -20...+70°C

General Technical Data p.243

FS1053

Temperature transducer with contacting sensor, digital output

Measurand: temperature
Output: Modbus RTU, Relay
Highlights: aluminium contacting block, incl. clamping band

Dimensional Drawing: p.367 #138 | Connection Drawing: p.317 #068 | Price Table: p.404

Measurement range temp.	-50...+180°C
Cable	2 m silicone cable (max. +180°C)
Cable gland	PG11 high-strength cable gland with strain relief
Material	Contacting block: aluminium
Protection type	IP65
Working temperature	Probe: -50...+180°C, Electronic: -20...+70°C

General Technical Data p.243

FS1060

Temperature transducer contact with clamping band, digital output

Measurand: temperature
Output: Modbus RTU, Relay
Highlights: clamping band, band width 9 mm, chucking capacity 50-110 mm, galvanized steel (in scope of delivery)

Dimensional Drawing: p.368 #139 | Connection Drawing: p.317 #068 | Price Table: p.404

Measurement range temp.	-30...+110°C
Cable gland	PG11 high-strength cable gland with strain relief
Material	Contacting block: aluminium
Protection type	IP65
Working temperature	Probe: -30...+110°C, Electronic: -20...+70°C

General Technical Data p.243

FS1080

Temperature transducer room, digital output

Measurand: temperature
Output: Modbus RTU, Relay
Highlights: on-wall or on flush-mounted box

Dimensional Drawing: p.333 #034 | Connection Drawing: p.318 #069 | Price Table: p.404

Measurement range temp.	0...+50°C
Cable gland	on the back or housing side (predetermined breaking point)
Protection type	IP30, IP20 (with display)
Working temperature	Electronic: -20...+70°C

General Technical Data p.243

Temperature Probes

digital output

Our 1-wire temperature sensors record the temperature in a range from -55 to +125°C in gaseous and liquid media and convert this measured value into a digital output signal.

1-wire protocol

The 1-wire protocol allows several sensors to be wired cost efficiently in a series, star or tree topology with just two optional 3 wires. The data cable can supply power (3-5,5 V) to the sensor if required.

Resolution

The conversion's resolution can be configured from 9 to 12 bit (equal to 0.5 / 0.25 / 0.125 / 0.0625 K).

Serial number

Each device optionally has a serial number label for the purposes of clear allocation, enabling simple and quick commissioning.

Formats & special formats

The temperature sensors are available with different housings, fittings, process connections, and line materials (PVC, silicone, PTFE, glass silk-stainless steel mesh, etc.) in different lengths. In addition, we can create a custom sensor format as the optimal solution for every requirement. (→page 24)

Easy assembly

Housings with innovative hinge locking technology (→page 32), sufficient terminal space, labelled circuit boards, and connection-friendly wire rope clamps offer maximum ease of installation and speed.

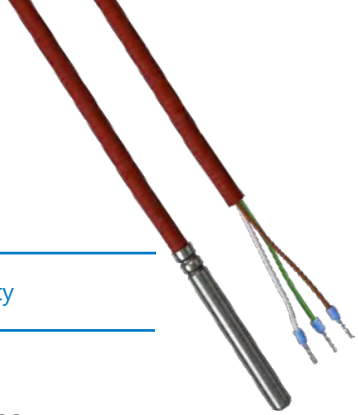

Best quality

With high-quality components, modern serial production, automated testing/calibration setups, and a 100% final inspection, you will be getting a product with the „Made in Germany“ guarantee of quality.

Allgemeine Technische Daten	
Sensor	DS18B20+
Accuracy	±0,5 K (-10...+85°C), sonst ±2 K
Resolution	9-12 Bit (+0,5°C up to +0,0625°C)
Circuit type	2-, 3-wire connection
Supply voltage	3...5,5 V
Current consumption	typ. 1,5 mA
Protection class	III
Storage temperature	-20...+70°C
Approvals	CE, EAC, RoHS

LF2/B-1W

1-wire contacting temperature sensor with clamping band

Measurand: temperature
Output: DS18B20+
Highlights: contacting block: aluminium, incl. clamping band, 2-wire connection, parasite powered

Dimensional Drawing: p.322 #002 | Connection Drawing: p.318 #070 | Price Table: p.434

Measurement range temp.	-30...+110°C, -30...+85°C (2-wire connection, parasite powered)
Electrical connection	screw terminals max. 1,5 mm²
Cable gland	PG11 high-strength cable gland with strain relief
Material	Contacting block: aluminium
Protection type	IP65
Working temperature	-30...+110°C

General Technical Data p.253

KS/B-1W

1-wire cable temperature sensor with silicone cable

Measurand: temperature
Output: DS18B20+
Highlights: moisture sealed rolled, Protection sleeve: stainless steel, with core cable ends

Dimensional Drawing: p.368 #140 | Connection Drawing: p.318 #071 | Price Table: p.430

Measurement range temp.	-55...+125°C, -30...+85°C (2-wire connection, parasite powered)
Electrical connection	stripped ends with ferrules
Cable	2 m up to 5 m silicone cable (3x0,25 mm², max. +180°C) with core cable ends
Material	Protection sleeve: stainless steel VA 1.4571
Protection type	IP67 (moisture sealed rolled)

General Technical Data p.253

TF1/B-1W

1-wire immersion temperature sensor with housing

Measurand: temperature
Output: DS18B20+
Highlights: quick an easy mounting

Dimensional Drawing: p.335 #040 | Connection Drawing: p.318 #070 | Price Table: p.465

Measurement range temp.	-30...+125°C, -30...+85°C (2-wire connection, parasite powered)
Electrical connection	screw terminals max. 1,5 mm²
Cable gland	PG11 high-strength cable gland with strain relief
Material	Protection sleeve: stainless steel VA 1.4571
Protection type	IP65
Working temperature	-30...+125°C

General Technical Data p.253

RF/B-1W

1-wire room temperature sensor

Measurand: temperature
Output: DS18B20+
Highlights: modern housing design, mounting on-wall or on junction box

Dimensional Drawing: p.333 #034 | Connection Drawing: p.318 #070 | Price Table: p.451

Measurement range temp.	-30...+60°C
Electrical connection	screw terminals max. 1,5 mm²
Cable gland	on the back or housing side (predetermined breaking point)
Protection type	IP30

General Technical Data p.253

Humidity and Temperature Transducers
digital output

Our humidity/temperature transducers record the ambient temperature and relative humidity via a digital sensor and convert the measured value via Modbus RTU into a digital output signal.

Changeover contact

The measuring devices can be expanded with a potential-free changeover contact, whose switch-on and switch-off values, delay, hold times, etc. are defined via the corresponding register.

DIP switch technology

The address, transmission mode/speed, terminal resistor, and master/slave function of the bus devices can be configured conveniently using innovative DIP switch technology. This means that the devices can be quickly and easily integrated into the system and later parameterized via the master. (→page 241)

Display

The optional backlit LCD display is used to display actual values, min/max values, switching thresholds, relay states, and can be rotated every 90°.

Read/write register

The min/max interval, the relay switching hysteresis, offset values, scalings, various display options (brightness, contrast, display mode, smileys), mean values, etc. can be set using the write command under the respective registers.

10 times the transmission speed

By forming blocks, up to ten arbitrary registers can be read out simultaneously with just one read command. This saves you up to 90% transmission time! (→page 239)

MADE IN GERMANY

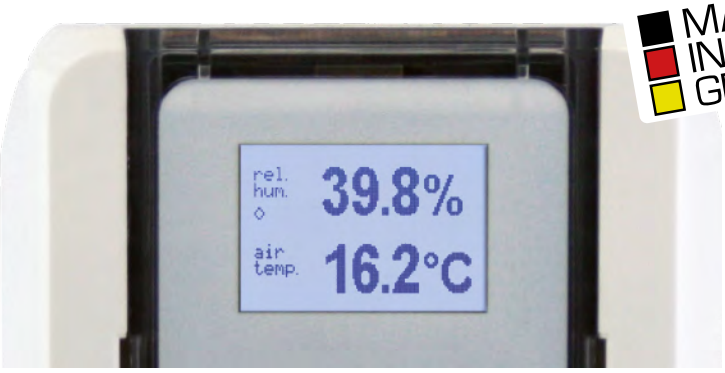

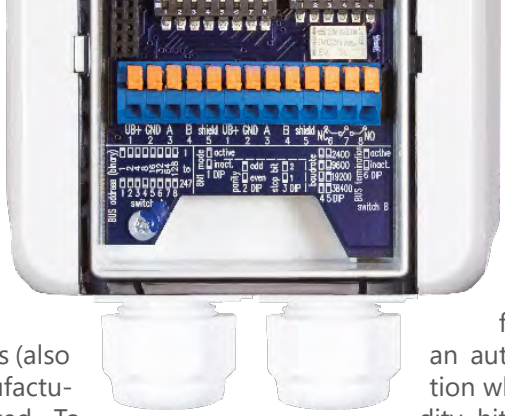

Cross-device functions

As a special function, a number of defined measured values of other bus users (also from different manufacturers) can be displayed. To display measured values from other bus users, these are entered by the bus master in the corresponding registers. The optional changeover contact can also be configured for measured values from other bus users. (→page 238)

Factory settings

The bus devices can be reset to the factory settings by the master during operation. The basic functionality of the device can thus be restored in a matter of seconds. This may be necessary if parameters such as offset, switching threshold, display modes, etc. are incorrect.

Heating function

The sensor element is reliably protected from condensation by an automatic heating function when the relative humidity hits the 95-99% range. Alternatively, it can always be heated when deployed in harsh environments.

Easy assembly

Housings with innovative hinge locking technology and double PG (→page 32), sufficient terminal space, labelled circuit boards, and connection-friendly push-in clamps offer maximum ease of installation and speed.

With high-quality components, modern serial production, automated testing/calibration setups, and a 100% final inspection, you will be getting a product with the „Made in Germany“ guarantee of quality.

General Technical Data	
Measurement range r.H.	0-100% r.H.
Measurement range abs. humidity	0-80 g/m³ (calculated)
Measurement range air fuel ratio	0-80 g/kg (calculated)
Measurement range dew point	-20...+80°C DP (calculated)
Long term stability	±1%/year
Offset	can be entered in the register
Sensor	Combined electronic humidity and temperature sensor
Flow rate	< 2 m/s
Supply voltage	24 V DC (±5%)
Current consumption	max. 20 mA + 30 mA (option display) + 20 mA (option relay)
Digital output	Modbus RTU
Alarm output	1 x potential-free change-over contact, 48 V, 1 A
Switching Hysteresis Relay	can be entered in the register
Electrical connection	push-in terminal, no tools required, time-saving
Protection class	III
Working range r.H.	0...98% r.H. in contaminant-free, non-condensing air
Storage temperature	-20...+50°C
Approvals	CE, EAC, RoHS

FS1100

Humidity transducer on-wall installation for relative/absolute humidity, dewpoint temperature, mixing ratio and temperature, digital output

Measurand: temperature, dew point temperature, rel. humidity, abs. humidity, mixing ratio

Output: Modbus RTU, Relay

Highlights: easy-to-install surface-mounted housing, optional LCD-Display, screwable stainless steel sinter filter

Dimensional Drawing: p.368 #141 | Connection Drawing: p.317 #068 | Price Table: p.404

Measurement range temp.	-20...+80°C
Accuracy humidity	±3% r.H. (30-70% r.H., else ±5% r.H., at 20°C)
Accuracy temperature	±0,5 K
Temperature dependency	±0,02% r.H. / K (voltage output), ±0,04% r.H. / K (current version); ±0,05°C / 10 K (voltage version), ±0,07°C / 10 K (current output)
Sensor protection	screwable stainless steel sinter filter, condensation protection by heating function in the range of 95...99% r.H.
Cable gland	PG11 high-strength cable gland with strain relief
Material	Protection tube: stainless steel V2A
Protection type	Housing/electronic: IP65, Sensor: IP30
Working temperature	Probe: -20...+80°C, Electronic: -20...+70°C

General Technical Data p.257

FS1101

Humidity transducer on-wall installation for relative/absolute humidity, dewpoint temperature, mixing ratio and temperature, high-precision with calibration certificate, digital output

Measurand: temperature, dew point temperature, rel. humidity, abs. humidity, mixing ratio
Output: Modbus RTU, Relay
Highlights: factory calibration certificate with traceability to a state standard

Dimensional Drawing: p.368 #141 | Connection Drawing: p.317 #068 | Price Table: p.405

Measurement range temp.	-20...+80°C
Accuracy humidity	±2% r.H. (30-70% r.H., else ±3% r.H. at 20°C)
Accuracy temperature	±0,3 K (10...40°C, else ±0,5 K),
Temperature dependency	±0,02% r.H. / K (voltage output), ±0,04% r.H. / K (current version); ±0,05°C / 10 K (voltage version), ±0,07°C / 10 K (current output)
Sensor protection	screwable stainless steel sinter filter, condensation protection by heating function in the range of 95...99% r.H.
Cable gland	PG11 high-strength cable gland with strain relief
Material	Protection tube: stainless steel V2A
Protection type	Housing/electronic: IP65, Sensor: IP30
Working temperature	Probe: -20...+80°C, Electronic: -20...+70°C
Certificate	industrial calibration certificate with reference to national standard

General Technical Data p.257

FS1120

Humidity transducer duct for relative/absolute humidity, dewpoint temperature, mixing ratio and temperature, digital output

Measurand: temperature, dew point temperature, rel. humidity, abs. humidity, mixing ratio
Output: Modbus RTU, Relay
Highlights: easy to install with included mounting flange

Dimensional Drawing: p.369 #142 | Connection Drawing: p.317 #068 | Price Table: p.405

Measurement range temp.	-20...+80°C
Accuracy humidity	±3% r.H. (30-70% r.H., else ±5% r.H., at 20°C)
Accuracy temperature	±0,5 K
Temperature dependency	±0,02% r.H. / K (voltage output), ±0,04% r.H. / K (current version); ±0,05°C / 10 K (voltage version), ±0,07°C / 10 K (current output)
Sensor protection	screwable stainless steel sinter filter, condensation protection by heating function in the range of 95...99% r.H.
Cable gland	PG11 high-strength cable gland with strain relief
Material	Protection tube: stainless steel V2A
Protection type	Housing/electronic: IP65, Sensor: IP30
Working temperature	Probe: -20...+80°C, Electronic: -20...+70°C

General Technical Data p.257

FS1121

Humidity transducer duct for relative/absolute humidity, dewpoint temperature, mixing ratio and temperature, high-precision with calibration certificate, digital output

Measurand: temperature, dew point temperature, rel. humidity, abs. humidity, mixing ratio

Output: Modbus RTU, Relay

Highlights: industrial calibration certificate with reference to national standard

Dimensional Drawing: p.369 #142 | Connection Drawing: p.317 #068 | Price Table: p.406

Measurement range temp.	-20...+80°C
Accuracy humidity	±2% r.H. (30-70% r.H., else ±3% r.H. at 20°C)
Accuracy temperature	±0,3 K (10...40°C, else ±0,5 K),
Temperature dependency	±0,02% r.H. / K (voltage output), ±0,04% r.H. / K (current version), ±0,05°C / 10 K (voltage version), ±0,07°C / 10 K (current output)
Sensor protection	screwable stainless steel sinter filter, condensation protection by heating function in the range of 95...99% r.H.
Cable gland	PG11 high-strength cable gland with strain relief
Material	Protection tube: stainless steel V2A
Protection type	Housing/electronic: IP65, Sensor: IP30
Working temperature	Probe: -20...+80°C, Electronic: -20...+70°C
Certificate	industrial calibration certificate with reference to national standard

General Technical Data p.257

FS1135

Humidity transducer compressed air for relative/absolute humidity, dewpoint temperature, mixing ratio and temperature, digital output

Measurand: temperature, dew point temperature, rel. humidity, abs. humidity, mixing ratio

Output: Modbus RTU, Relay

Highlights: Easy-to-install surface-mounted housing, optionally with backlit LCD display, screwable stainless steel sinter filter

Dimensional Drawing: p.374 #158 | Connection Drawing: p.317 #068 | Price Table: p.406

Measurement range temp.	-20...+80°C
Accuracy humidity	±3% r.H. (30-70% r.H., else ±5% r.H., at 20°C)
Accuracy temperature	±0,5 K
Temperature dependency	±0,02% r.H. / K (voltage output), ±0,04% r.H. / K (current version); ±0,05°C / 10 K (voltage version), ±0,07°C / 10 K (current output)
Sensor protection	screwable stainless steel sinter filter, condensation protection by heating function in the range of 95...99% r.H.
Cable gland	PG11 high-strength cable gland with strain relief
Material	Protection tube: stainless steel V2A
Protection type	Housing/electronic: IP65, Sensor: IP30
Pressure resistance	max. 10 bar
Working temperature	Probe: -20...+80°C, Electronic: -20...+70°C

General Technical Data p.257

FS1140

Humidity transducer ceiling for relative/ absolute humidity, dewpoint temperature, mixing ratio and temperature, digital output

Measurand: temperature, dew point temperature, rel. humidity, abs. humidity, mixing ratio

Output: Modbus RTU, Relay

Highlights: in the false ceiling by 2 tension springs

Dimensional Drawing: p.369 #143 | Connection Drawing: p.317 #068 | Price Table: p.406

Measurement range temp.	-20...+80°C
Accuracy humidity	±3% r.H. (30-70% r.H., else ±5% r.H., at 20°C)
Accuracy temperature	±0,5 K
Temperature dependency	±0,02% r.H. / K (voltage output), ±0,04% r.H. / K (current version); ±0,05°C / 10 K (voltage version), ±0,07°C / 10 K (current output)
Sensor protection	mounted inside housing, condensation protection by heating function in the range of 95...99% r.H.
Cable	1 m PVC cable
Cable gland	PG11 high-strength cable gland with strain relief
Protection type	Housing/electronic: IP65, Sensor: IP30
Working temperature	Probe: -20...+80°C, Electronic: -20...+70°C

General Technical Data p.257

FS1141

Humidity transducer with pendulum sensor for relative/absolute humidity, dewpoint temperature, mixing ratio and temperature, digital output

Measurand: temperature, dew point temperature, rel. humidity, abs. humidity, mixing ratio
Output: Modbus RTU, Relay
Highlights: pendular probe

Dimensional Drawing: p.369 #144 | Connection Drawing: p.317 #068 | Price Table: p.407

Measurement range temp.	-20...+80°C
Accuracy humidity	±3% r.H. (30-70% r.H., else ±5% r.H., at 20°C)
Accuracy temperature	±0,5 K
Temperature dependency	±0,02% r.H. / K (voltage output), ±0,04% r.H. / K (current version); ±0,05°C / 10 K (voltage version), ±0,07°C / 10 K (current output)
Sensor protection	screwable stainless steel sinter filter, condensation protection by heating function in the range of 95...99% r.H.
Cable	2 m PVC cable
Cable gland	PG11 high-strength cable gland with strain relief
Material	Pendulum: brass nickel-plated
Protection type	Housing/electronic: IP65, Sensor: IP30
Working temperature	Probe: -20...+80°C, Electronic: -20...+70°C

General Technical Data p.257

FS1180

Humidity transducer room for relative/absolute humidity, dewpoint temperature, mixing ratio and temperature, digital output

Measurand: temperature, dew point temperature, rel. humidity, abs. humidity, mixing ratio
Output: Modbus RTU, Relay
Highlights: modern housing design, optional LCD-Display

Dimensional Drawing: p.333 #034 | Connection Drawing: p.318 #069 | Price Table: p.407

Measurement range temp.	0...+50°C
Accuracy humidity	±3% r.H. (30-70% r.H., else ±5% r.H., at 20°C)
Accuracy temperature	±0,5 K
Temperature dependency	±0,02% r.H. / K (voltage output), ±0,04% r.H. / K (current version); ±0,05°C / 10 K (voltage version), ±0,07°C / 10 K (current output)
Sensor protection	mounted inside housing, condensation protection by heating function in the range of 95...99% r.H.
Cable gland	on the back or housing side (predetermined breaking point)
Protection type	IP30, IP20 (with display)
Working temperature	0...+50°C

General Technical Data p.257

Pressure Transducers

digital output

Our pressure transducers record the over-, under-, or differential pressure or air pressure via a digital sensor and convert the measured value into a digital output signal using Modbus RTU.

Changeover contact

The measuring devices can be expanded with a potential-free changeover contact, whose switch-on and switch-off values, delay, hold times, etc. are defined via the corresponding register.

DIP switch technology

The address, transmission mode/speed, terminal resistor, and master/slave function of the bus devices can be configured conveniently using innovative DIP switch technology. This means that the devices can be quickly and easily integrated into the system and later parameterized via the master. (→page 241)

Manual zero point adjustment

A manual zero point adjustment can be done using a register command.

Display

The optional backlit LCD display is used to display actual values, min/max values, switching thresholds, relay states, and can be rotated every 90°.

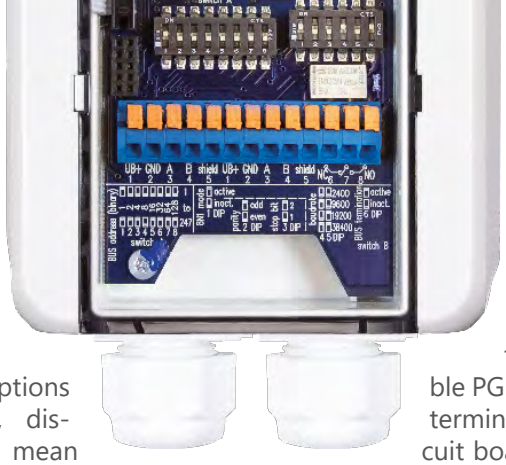

Read/write register

The min/max interval, the relay switching hysteresis, offset values, scalings, various display options (brightness, contrast, display mode, smileys), mean values, etc. can be set using the write command under the respective registers.

Easy assembly

Housings with innovative hinge locking technology and double PG (→page 32), sufficient terminal space, labelled circuit boards, and connection-friendly push-in clamps offer maximum ease of installation and speed.

Flow calculation

With the FS1200, the K-factor, the output unit, the output scaling, and the calculation formula can be configured for volume flow calculation.

Best quality

With high-quality components, modern serial production, automated testing/calibration setups, and a 100% final inspection, you will be getting a product with the „Made in Germany“ guarantee of quality.

Barometric pressure

To calculate the barometric air pressure, the altitude above sea level can be configured in the corresponding register.

General Technical Data	
Measurement range atm. air pressure	500-1150 mbar
Measurement range bar. air pressure	500-1150 mbar
Output attentuation	can be entered in the register
Supply voltage	24 V DC (±5%)
Digital output	Modbus RTU
Alarm output	1 x potential-free change-over contact, 48 V, 1 A
Switching Hysteresis Relay	can be entered in the register
Electrical connection	push-in terminal, no tools required, time-saving
Pressure resistance	5-times of measurement range
Cable gland	PG11 high-strength cable gland with strain relief
Protection class	III
Working range r.H.	0...98% r.H. in contaminant-free, non-condensing air
Working temperature	0...+50°C
Storage temperature	0...+50°C
Approvals	CE, EAC, RoHS

FS1200

Pressure transducer for pressure difference, atmospheric/barometric air pressure and volume flow, digital output

Measurand: atm. air pressure, bar. air pressure, differential pressure

Output: Modbus RTU, Relay

Highlights: input altitude above sea level, easy-to-install surface-mounted housing, optional LCD-Display

Dimensional Drawing: p.370 #145 | Connection Drawing: p.317 #068 | Price Table: p.408

Measurement range differential pressure	P21: -100...+100 Pa, P22: -500...+500 Pa, P23: -5000...+5000 Pa
Measurement range volume flow (calculated)	V1: 0-65.000 m^3/h, V2: 0-200.000 m^3/h, V3: 0-30.000 m^3/h
Accuracy	pressure difference: ±3,0% FS (at 20°C); air pressure ±5 mbar (at 20°C)
Temperature dependency	pressure difference: ±2,5% FS / 10 K; air pressure : 1 mbar / 10 K
Linearity inaccuracy	pressure difference / air: ±1,0% final value
Offset	air pressure: can be entered in the register
Current consumption	max. 30 mA + 30 mA (option display) + 20 mA (option relay)
Protection type	IP65, IP30 (with air pressure sensor)

General Technical Data p.267

FS1205

Pressure transducer for atmospheric and barometric air pressure, digital output

Measurand: atm. air pressure, bar. air pressure
Output: Modbus RTU, Relay
Highlights: input altitude above sea level, easy-to-install surface-mounted housing, optional LCD-Display

Dimensional Drawing: p.370 #146 | Connection Drawing: p.317 #068 | Price Table: p.409

Accuracy	±5 mbar (at 20°C)
Temperature dependency	1 mbar / 10 K
Linearity inaccuracy	±1,0% final value
Offset	can be entered in the register
Current consumption	max. 20 mA + 30 mA (option display) + 20 mA (option relay)
Protection type	IP30

General Technical Data p.267

Air Quality Transducers

digital output

Our air quality sensors record the CO2/CO concentration, volatile organic compounds (VOC), humidity and temperature of the ambient air, and convert the measured value into a digital output signal for transmission via Modbus RTU.

Changeover contact

The measuring devices can be expanded with a potential-free changeover contact, whose switch-on and switch-off values, delay, hold times, etc. are defined via the corresponding register.

DIP switch technology

The address, transmission mode/speed, terminal resistor, and master/slave function of the bus devices can be configured conveniently using innovative DIP switch technology. This means that the devices can be quickly and easily integrated into the system and later parameterized via the master. (→page 241)

Read/write register

The min/max interval, the relay switching hysteresis, offset values, scalings, various display options (brightness, contrast, display mode, smileys), mean values, etc. can be set using the write command under the respective registers.

Automatic/manual zero point adjustment

The air quality sensor carries out an automatic CO_2/VOC recalibration at regular intervals to ensure stable measurements over the long time.
This auto calibration can also be deactivated and carried out manually.

Display

The optional backlit LCD display is used to display actual values, min/max values, switching thresholds, relay states, and can be rotated every 90°. (→page 33)

Easy assembly

Housings with innovative hinge locking technology and double PG (→page 32), sufficient terminal space, labelled circuit boards, and connection-friendly push-in clamps offer maximum ease of installation and speed.

MADE IN GERMANY

Best quality

With high-quality components, modern serial production, automated testing/calibration setups, and a 100% final inspection, you will be getting a product with the „Made in Germany“ guarantee of quality.

RoHS COMPLIANT

General Technical Data	
Measurement range r.H.	0-100% r.H.
Measurement range abs. humidity	0-80 g/m³ (calculated)
Measurement range air fuel ratio	0-80 g/kg (calculated)
Measurement range dew point	-20...+80°C DP (calculated)
Measurement range temp.	-30...+100°C
Measurement range VOC	0-100% (good / bad air quality, referring to the calibration gas)
Accuracy humidity	±3% r.H. (30-70% r.H., else ±5% r.H., at 20°C)
Accuracy temperature	±0,3 K (10...40°C, else ±0,5 K),
Accuracy voc	±15% FS
Response time (t90)	< 5 min
Offset	can be entered in the register
Supply voltage	24 V DC (±5%)
Current consumption	max. 100-200 mA, depending on the selected measurand and equipment
Digital output	Modbus RTU
Alarm output	1 x potential-free change-over contact, 48 V, 1 A
Switching Hysteresis Relay	can be entered in the register
Electrical connection	push-in terminal, no tools required, time-saving
Protection class	III
Working range r.H.	0...98% r.H. in contaminant-free, non-condensing air
Working temperature	0...+50°C
Storage temperature	-20...+50°C
Approvals	CE, EAC, RoHS

FS1300

Air quality transducer on-wall for CO2, VOC, humidity and temperature, digital output

Measurand: CO2, VOC, humidity, temperature
Output: Modbus RTU, Relay
Highlights: sensor protection with sinter, easy-to-install surface-mounted housing, optional LCD-Display

Dimensional Drawing: p.370 #147 | Connection Drawing: p.317 #068 | Price Table: p.409

Measurement range CO2	0-10000 ppm
Accuracy CO2	0-2000 ppm: ±50 ppm + 2% f. mv, 2000-5000 ppm: ±50 ppm + 3% f. mv, > 5000 ppm: ±100 ppm + 5% f. mv (at 20°C, 1013 mbar, auto-calibration ON)
Temperature dependency	CO2: ±5 ppm / K, Humidity: ±0,02% r.F. / K, Temperature: ±0,05°C / 10 K
Pressure dependency	CO2: 1,6% f. mv/kPa
Long term stability	CO2: ±1% FS/year, Humidity: ±1%/year, VOC: ±10% FS/year
Sensor	CO2: nondispersive infrared sensor (NDIR), Humidity/Temperature: combined electronic sensor, VOC: metal oxide sensor
Sensor protection	sinter filter
Running-in time	CO2: 10 min, Humidity: 1 min, Temperature: 1 min, VOC: 1 h
Cable gland	PG11 high-strength cable gland with strain relief
Protection type	Housing/electronic: IP65, Sensor: IP30

General Technical Data p.271

FS1301

Air quality transducer on-wall for CO, VOC, humidity and temperature, digital output

Measurand: CO, VOC, humidity, temperature
Output: Modbus RTU, Relay
Highlights: sensor protection with sinter, easy-to-install surface-mounted housing, optional LCD-Display

Dimensional Drawing: p.370 #147 | Connection Drawing: p.317 #068 | Price Table: p.410

Measurement range CO	0-1000 ppm
Accuracy CO	±5 ppm + max. ±5% from measured value (at 20°C, 1013 mbar)
Temperature dependency	CO: ±5 ppm / K, Humidity: ±0,02% r.F. / K, Temperature: ±0,05°C / 10 K
Long term stability	CO: ±1% FS/year, Humidity: ±1%/year, VOC: ±10% FS/year
Sensor	CO: electrochemical sensor, Humidity/Temperature: combined electronic sensor, VOC: metal oxide sensor
Sensor protection	sinter filter
Running-in time	CO: 1 min, Humidity: 1 min, Temperature: 1 min, VOC: 1 h
Cable gland	PG11 high-strength cable gland with strain relief
Protection type	Housing/electronic: IP65, Sensor: IP30

General Technical Data p.271

FS1320

Air quality transducer duct for CO2, VOC, humidity and temperature, digital output

Measurand: CO2, VOC, humidity, temperature
Output: Modbus RTU, Relay
Highlights: easy to install with included mounting flange

Dimensional Drawing: p.371 #148 | Connection Drawing: p.317 #068 | Price Table: p.412

Measurement range CO2	0-10000 ppm
Accuracy CO2	0-2000 ppm: ±50 ppm + 2% f. mv, 2000-5000 ppm: ±50 ppm + 3% f. mv, > 5000 ppm: ±100 ppm + 5% f. mv (at 20°C, 1013 mbar, auto-calibration ON)
Temperature dependency	CO2: ±5 ppm / K, Humidity: ±0,02% r.F. / K, Temperature: ±0,05°C / 10 K
Pressure dependency	CO2: 1,6% f. mv/kPa
Long term stability	CO2: ±1% FS/year, Humidity: ±1%/year, VOC: ±10% FS/year
Sensor	CO2: nondispersive infrared sensor (NDIR), Humidity/Temperature: combined electronic sensor, VOC: metal oxide sensor
Sensor protection	sinter filter
Running-in time	CO2: 10 min, Humidity: 1 min, Temperature: 1 min, VOC: 1 h
Cable gland	PG11 high-strength cable gland with strain relief
Material	Protection tube: stainless steel V2A
Protection type	Housing/electronic: IP65, Sensor: IP30

General Technical Data p.271

FS1321

Air quality transducer duct for CO, VOC, humidity and temperature, digital output

Measurand: CO, VOC, humidity, temperature
Output: Modbus RTU, Relay
Highlights: easy to install with included mounting flange

Dimensional Drawing: p.371 #148 | Connection Drawing: p.317 #068 | Price Table: p.413

Measurement range CO	0-1000 ppm
Accuracy CO	±5 ppm + max. ±5% from measured value (at 20°C, 1013 mbar)
Temperature dependency	CO: ±5 ppm / K, Humidity: ±0,02% r.F. / K, Temperature: ±0,05°C / 10 K
Long term stability	CO: ±1% FS/year, Humidity: ±1%/year, VOC: ±10% FS/year
Sensor	CO: electrochemical sensor, Humidity/Temperature: combined electronic sensor, VOC: metal oxide sensor
Sensor protection	sinter filter
Running-in time	CO: 1 min, Humidity: 1 min, Temperature: 1 min, VOC: 1 h
Cable gland	PG11 high-strength cable gland with strain relief
Material	Protection tube: stainless steel V2A
Protection type	Housing/electronic: IP65, Sensor: IP30

General Technical Data p.271

FS1380

Air quality transducer indoor for CO2, VOC, humidity and temperature, digital output

Measurand: CO2, VOC, humidity, temperature
Output: Modbus RTU, Relay
Highlights: modern housing design, optional LCD-Display

Dimensional Drawing: p.333 #034 | Connection Drawing: p.318 #069 | Price Table: p.414

Measurement range CO2	0-10000 ppm
Accuracy CO2	0-2000 ppm: ±50 ppm + 2% f. mv, 2000-5000 ppm: ±50 ppm + 3% f. mv, > 5000 ppm: ±100 ppm + 5% f. mv (at 20°C, 1013 mbar, auto-calibration ON)
Temperature dependency	CO2: ±5 ppm / K, Humidity: ±0,02% r.F. / K, Temperature: ±0,05°C / 10 K
Pressure dependency	CO2: 1,6% f. mv/kPa
Long term stability	CO2: ±1% FS/year, Humidity: ±1%/year, VOC: ±10% FS/year
Sensor	CO2: nondispersive infrared sensor (NDIR), Humidity/Temperature: combined electronic sensor, VOC: metal oxide sensor
Sensor protection	mounted inside housing
Running-in time	CO2: 10 min, Humidity: 1 min, Temperature: 1 min, VOC: 1 h
Cable gland	on the back or housing side (predetermined breaking point)
Protection type	IP30, IP20 (with display)

General Technical Data p.271

FS1381

Air quality transducer indoor for CO, VOC, humidity and temperature, digital output

Measurand: CO, VOC, humidity, temperature
Output: Modbus RTU, Relay
Highlights: modern housing design, optional LCD-Display

Dimensional Drawing: p.333 #034 | Connection Drawing: p.318 #069 | Price Table: p.415

Measurement range CO	0-1000 ppm
Accuracy CO	±5 ppm + max. ±5% from measured value (at 20°C, 1013 mbar)
Temperature dependency	CO: ±5 ppm / K, Humidity: ±0,02% r.F. / K, Temperature: ±0,05°C / 10 K
Long term stability	CO: ±1% FS/year, Humidity: ±1%/year, VOC: ±10% FS/year
Sensor	CO: electrochemical sensor, Humidity/Temperature: combined electronic sensor, VOC: metal oxide sensor
Sensor protection	mounted inside housing
Running-in time	CO: 1 min, Humidity: 1 min, Temperature: 1 min, VOC: 1 h
Cable gland	on the back or housing side (predetermined breaking point)
Protection type	IP30, IP20 (with display)

General Technical Data p.271

Transducer Fine Dust / Particles
digital output

Our air quality sensors use a laser-based sensor to detect the particles/fine dust in the ambient air and convert the measured value via Modbus RTU into a digital output signal.

Changeover contact

The measuring devices can be expanded with a potential-free changeover contact, whose switch-on and switch-off values, delay, hold times, etc. are defined via the corresponding register.

DIP switch technology

The address, transmission mode/speed, terminal resistor, and master/slave function of the bus devices can be configured conveniently using innovative DIP switch technology. This means that the devices can be quickly and easily integrated into the system and later parameterized via the master. (→page 241)

Read/write register

The min/max interval, the relay switching hysteresis, offset values, scalings, various display options (brightness, contrast, display mode, smileys), mean values, etc. can be set using the write command under the respective registers.

Display

The optional backlit LCD display is used to display actual values, min/max values, switching thresholds, relay states, and can be rotated every 90°.

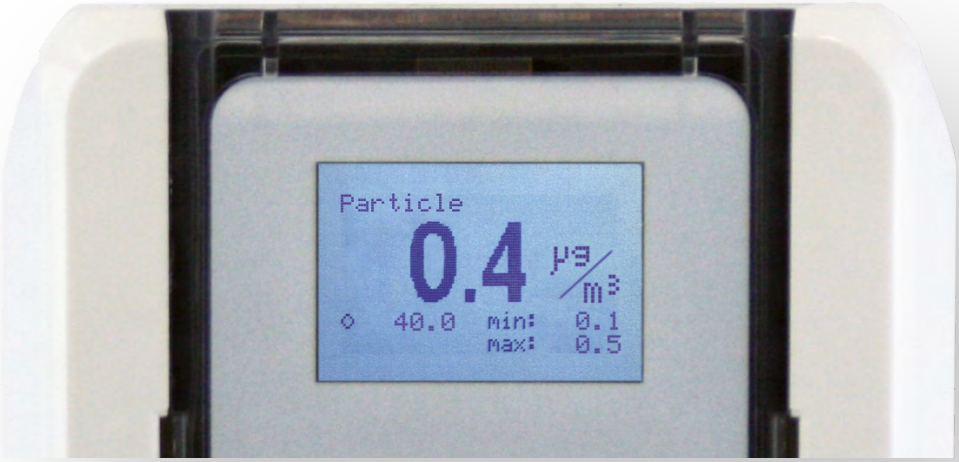

Easy assembly

Housings with innovative hinge locking technology and double PG (→Seite 32), sufficient terminal space, labelled circuit boards, and connection-friendly push-in clamps offer maximum ease of installation and speed.

Best quality

With high-quality components, modern serial production, automated testing/calibration setups, and a 100% final inspection, you will be getting a product with the „Made in Germany" guarantee of quality.

Changer | 0-10 V | 4-20 mA | Modbus

FS1308

Transmitter particulate matter, digital output

Measurand: particulate matter
Output: Modbus RTU, Relay
Highlights: PM2.5, PM10

Dimensional Drawing: S.373 #156 | Connection Drawing: S.317 #068 | Price Table: S.411

Measurement range PM2.5/PM10	0 µg/m³ ... 1000 µg/m³
Accuracy PM2.5/PM10	±5 µg/m³ + max. ±4% FS (@ 20°C, 45% r.F., 1013 mbar)
Temperature dependency	±1% FS / 10 K
Response time (t90)	< 1 s
Long term stability	±1% FS/year
Sensor	laser-based sensor
Supply voltage	24 V DC (±5%)
Digital output	Modbus RTU
Alarm output	1 x potential-free change-over contact, 48 V, 1 A
Switching Hysteresis Relay	can be entered in the register
Electrical connection	push-in terminal, no tools required, time-saving
Cable gland	PG11 high-strength cable gland with strain relief
Protection type	IP65 (housing/electronic), IP20 (sensor)
Protection class	III
Working range r.H.	0...98% r.H. in contaminant-free, non-condensing air
Working temperature	0...+50°C
Storage temperature	-20...+50°C
Approvals	CE, EAC, RoHS

Transducer Oxygen O2

digital output

Our air quality sensors use an electrochemical sensor to measure the oxygen content in the ambient air and convert the measured value via Modbus RTU into a digital output signal.

Changeover contact

The measuring devices can be expanded with a potential-free changeover contact, whose switch-on and switch-off values, delay, hold times, etc. are defined via the corresponding register.

DIP switch technology

The address, transmission mode/speed, terminal resistor, and master/slave function of the bus devices can be configured conveniently using innovative DIP switch technology. This means that the devices can be quickly and easily integrated into the system and later parameterized via the master. (→page 241)

Automatic/manual zero point adjustment

The air quality sensor with a 0-25% vol. measurement range carries out an automatic recalibration at regular intervals to ensure stable measurements over the long time.
This auto calibration can also be deactivated and carried out manually.

Read/write register

The min/max interval, the relay switching hysteresis, offset values, scalings, various display options (brightness, contrast,

display mode, smileys), mean values, etc. can be set using the write command under the respective registers.

Housings with innovative hinge locking technology and double PG (→page 32), sufficient terminal space, labelled circuit boards, and connection-friendly push-in clamps offer maximum ease of installation and speed.

Display

The optional backlit LCD display is used to display actual values, min/max values, switching thresholds, relay states, and can be rotated every 90°.

Easy assembly

Best quality

With high-quality components, modern serial production, automated testing/calibration setups, and a 100% final inspection, you will be getting a product with the „Made in Germany" guarantee of quality.

Changer | 0-10 V | 4-20 mA | Modbus

FS1309

Transmitter Oxygen O2, digital output

Measurand: oxygen O2
Output: Modbus RTU, Relay
Highlights: O2 content in the air

Dimensional Drawing: S.374 #157 | Connection Drawing: S.317 #068 | Price Table: S.411

Measurement range O2	0...25% vol. optional 0...100% vol
Accuracy O2	± 0,2% vol. + max. ±0,5% FS (@ 20°C, 45% r.H., 1013 mbar)
Temperature dependency	±1% FS / 10 K
Response time (t90)	< 1 s
Long term stability	±0,2% FS/year by auto-calibration ON
Sensor	Electrochemical sensor
Supply voltage	24 V DC (±5%)
Digital output	Modbus RTU
Alarm output	1 x potential-free change-over contact, 48 V, 1 A
Switching Hysteresis Relay	can be entered in the register
Electrical connection	push-in terminal, no tools required, time-saving
Cable gland	PG11 high-strength cable gland with strain relief
Protection type	IP65 (housing/electronic), IP20 (sensor)
Protection class	III
Working range r.H.	0...98% r.H. in contaminant-free, non-condensing air
Working temperature	0...+50°C
Storage temperature	-20...+50°C
Approvals	CE, EAC, RoHS

Flow Transducers

digital output

Our flow transmitters record the air speed and ambient temperature in the air duct via a silicon sensor or a diode and convert the measured value into a digital output signal for transmission via Modbus RTU.

Changeover contact

The measuring devices can be expanded with a potential-free changeover contact, whose switch-on and switch-off values, delay, hold times, etc. are defined via the corresponding register.

DIP switch technology

The address, transmission mode/speed, terminal resistor, and master/slave function of the bus devices can be configured conveniently using innovative DIP switch technology. This means that the devices can be quickly and easily integrated into the system and later parameterized via the master. (→page 241)

Read/write register

The min/max interval, the relay switching hysteresis, offset values, scalings, various display options (brightness, contrast, display mode, smileys), mean values, etc. can be set using the write command under the respective registers.

Display

The optional backlit LCD display is used to display actual values, min/max values, switching thresholds, relay states, and can be rotated every 90°.

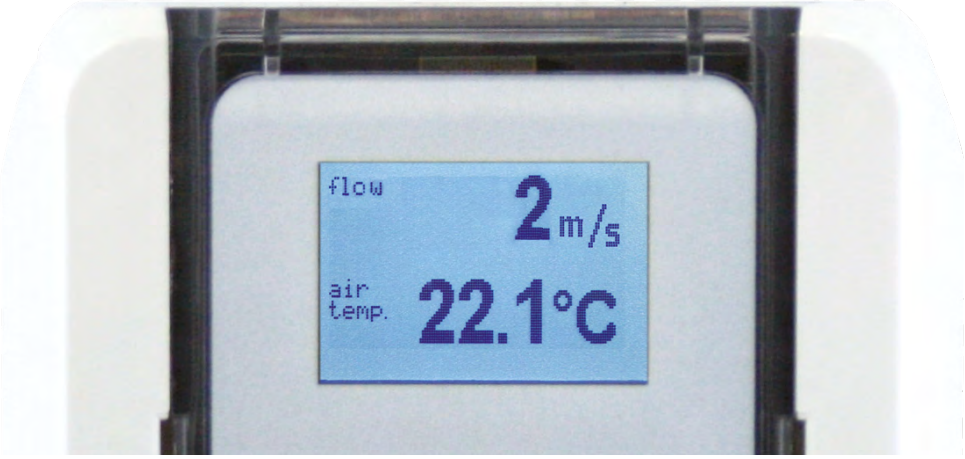

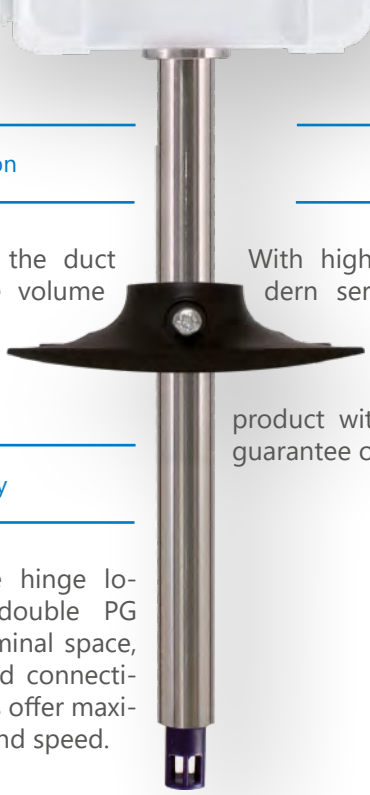

Flow calculation

By entering the area of the duct cross-section in cm^2, the volume flow can be calculated in m^3/hr. from the flow velocity.

Easy assembly

Housings with innovative hinge locking technology and double PG (→page 32), sufficient terminal space, labelled circuit boards, and connection-friendly push-in clamps offer maximum ease of installation and speed.

Best quality

With high-quality components, modern serial production, automated testing/calibration setups, and a 100% final inspection, you will be getting a product with the „Made in Germany" guarantee of quality.

MADE IN GERMANY

EAC CE RoHS COMPLIANT DEKRA

General Technical Data	
Measuring principle	calorimetric measuring method
Measurement range temp.	0...+50°C
Accuracy	±0,3 m/s + max. ±4% FS (@ 20°C, 45% r.H., 1013 mbar), ±0,5 K (@ 20°C, > 1 m/s)
Temperature dependency	±1% FS / 10 K
Long term stability	±1% FS/year, ±0,2 K/year
Response time (t90)	> 4 s @ 10 m/s
Running-in time	< 30 s at initial operation because of tempering
Supply voltage	24 V DC (±5%)
Current consumption	max. 100-200 mA, depending on the selected measurand and equipment
Digital output	Modbus RTU
Alarm output	1 x potential-free change-over contact, 48 V, 1 A
Switching Hysteresis Relay	can be entered in the register
Electrical connection	push-in terminal, no tools required, time-saving
Cable gland	PG11 high-strength cable gland with strain relief
Material	Protection tube: stainless steel V2A
Protection type	Housing/electronic: IP65, Sensor: IP30
Protection class	III
Working temperature	-20...+50°C
Storage temperature	-20...+50°C
Approvals	CE, EAC, RoHS

FS1420

Flow transducer duct for laminar airflow, volume flow and temperature, digital output

Measurand: temperature, flow, volume flow
Output: Modbus RTU, Relay
Highlights: volume calculation without k-factor

Dimensional Drawing: p.371 #149 | Connection Drawing: p.317 #068 | Price Table: p.416

Measurement range flow	0-5 m/s
Measurement range volume flow (calculated)	0-65.000 m³/h
Working range	0,3-5 m/s, 0...98% r.H. in contaminant-free, non-condensing air

General Technical Data p.283

FS1421

Flow transducer duct for airflow, volume flow and temperature, digital output

Measurand: temperature, flow, volume flow
Output: Modbus RTU, Relay
Highlights: volume calculation without k-factor

Dimensional Drawing: p.371 #149 | Connection Drawing: p.317 #068 | Price Table: p.416

Measurement range flow	0-20 m/s
Measurement range volume flow (calculated)	0-200.000 m³/h
Working range	0,3-20 m/s, 0...98% r.H. in contaminant-free, non-condensing air

General Technical Data p.283

Brightness and Motion Transducers
digital output

Our brightness transmitters and motion detectors record the brightness, movement, humidity and temperature via a photodiode, infrared sensor or digital humidity/temperature sensor and convert the measured value into a digital output signal for transmission via Modbus RTU.

Fresnel lens

A Fresnel lens increases the angle of incidence and thus the light detection range. The diffuse light conduction to the sensor minimizes interference and incorrect influences.

Changeover contact

The measuring devices can be expanded with a potential-free changeover contact, whose switch-on and switch-off values, delay, hold times, etc. are defined via the corresponding register.

DIP switch technology

The address, transmission mode/speed, terminal resistor, and master/slave function of the bus devices can be configured conveniently using innovative DIP switch technology. This means that the devices can be quickly and easily integrated into the system and later parameterized via the master. (→page 241)

Read/write register

The min/max interval, the relay switching hysteresis, offset values, scalings, various display options (brightness, contrast, display mode, smileys), mean values, etc. can be set using the write command under the respective registers.

MADE IN GERMANY

Light-guided motion detection

A setting can be made so that the motion detection is dependent on the measured brightness (light-guided motion detection). The desired light intensity is set as desired in the register.

Best quality

With high-quality components, modern serial production, automated testing/calibration setups, and a 100% final inspection, you will be getting a product with the „Made in Germany" guarantee of quality.

Easy assembly

Housings with innovative hinge locking technology and double PG (→page 32), sufficient terminal space, labelled circuit boards, and connection-friendly push-in clamps offer maximum ease of installation and speed.

EAC CE RoHS COMPLIANT DEKRA

General Technical Data	
Measurement range brightness	0-100 kLux
Measurement range motion	motion yes/no, apex angle 90°/110° on 360° range, reach 10 m
Accuracy brightness	±10% FS
Temperature dependency	±5% FS / 10 K
Response time (t90)	< 1 s
Sensor protection	mounted inside housing
Supply voltage	24 V DC (±5%)
Current consumption	max. 20-200 mA, depending on the selected measurand and equipment
Digital output	Modbus RTU
Alarm output	1 x potential-free change-over contact, 48 V, 1 A
Switching Hysteresis Relay	can be entered in the register
Holding time	adjustable from 5 s up to 15 min
Threshold	threshold can be entered in the register
Electrical connection	push-in terminal, no tools required, time-saving
Protection class	III
Working range r.H.	0...98% r.H. in contaminant-free, non-condensing air
Storage temperature	-20...+50°C
Approvals	CE, EAC, RoHS

FS1500

Transducer on-wall for brightness, movement, humidity and temperature, digital output

Measurand: temperature, rel. humidity, brightness, motion
Output: Modbus RTU, Relay
Highlights: inconspicuous housing design, snap fastening

Dimensional Drawing: S.371 #150 | Connection Drawing: S.317 #068 | Price Table: S.417

Measurement range r.H.	0-100% r.H.
Measurement range temp.	-30...+100°C
Accuracy humidity	±3% r.H. (30-70% r.H., else ±5% r.H., at 20°C)
Accuracy temperature	±0,3 K (10...40°C, else ±0,5 K),
Offset	air pressure: can be entered in the register
Sensor	Motion: infrared sensor, Brightness: photodiode, Humidity/Temperature: combined electronic sensor
Running-in time	Humidity: 10 min, Temperature: 10 min
Cable gland	PG11 high-strength cable gland with strain relief
Protection type	Housing/electronic: IP65, Sensor: IP30
Working temperature	Electronic: -20...+50°C

General Technical Data S.287

FS1540

Transducer ceiling for brightness or movement, digital output

Measurand: brightness, motion
Output: Modbus RTU, Relay
Highlights: in the false ceiling by 2 tension springs

Dimensional Drawing: S.372 #151 | Connection Drawing: S.317 #068 | Price Table: S.418

Offset	can be entered in the register
Sensor	Motion: infrared sensor, Brightness: photodiode
Cable	1 m PVC cable
Cable gland	PG11 high-strength cable gland with strain relief
Protection type	Housing/electronic: IP65, Sensor: IP30
Working temperature	Electronic: -20...+50°C

General Technical Data S.287

FS1580

Transducer indoor for brightness, movement, humidity and temperature, digital output

Measurand: temperature, rel. humidity, brightness, motion
Output: Modbus RTU, Relay
Highlights: modern housing design, on-wall or on flush-mounted box

Dimensional Drawing: S.356 #103 | Connection Drawing: S.318 #069 | Price Table: S.418

Measurement range r.H.	0-100% r.H.
Measurement range temp.	-30...+100°C
Accuracy humidity	±3% r.H. (30-70% r.H., else ±5% r.H., at 20°C)
Accuracy temperature	±0,3 K (10...40°C, else ±0,5 K),
Offset	can be entered in the register
Sensor	Motion: infrared sensor, Brightness: photodiode, Humidity/Temperature: combined electronic sensor
Running-in time	Humidity: 10 min, Temperature: 10 min
Cable gland	on the back or housing side (predetermined breaking point)
Protection type	IP30
Working temperature	0...+50°C

General Technical Data S.287

I/O-Devices, Relay-Modules and Service-Displays

With the development of innovative digital I/O devices, relay modules, and service displays, we are setting new standards in many areas of Industry 4.0.

Signal converters

The FS1701 A/D converter has 8 analogue inputs (4-20 mA, 0-10 V) and a digital Modbus RTU output. The FS1702 D/A converter has a digital Modbus RTU input and 8 analogue outputs (0-10 V, 4-20 mA, 0/10 V).

Relay-Module

The FS1703 relay module has a digital Modbus RTU input and 8 relay outputs, which individually have different states and can be controlled via the Modbus RTU.

Service display

The large 4-inch programmable service display shows all measured values, system states, time profiles, switching states, input and output configurations, etc. of the other bus users. For example, the most important service parameters can be displayed directly in the control cabinet for service personnel.

DIP switch technology

The address, transmission mode/speed, terminal resistor, and master/slave function of the bus devices can be configured conveniently using innovative DIP switch technology. This means that the devices can be quickly and easily integrated into the system and later parameterized via the master. (→page 241)

MADE IN GERMANY

RoHS COMPLIANT

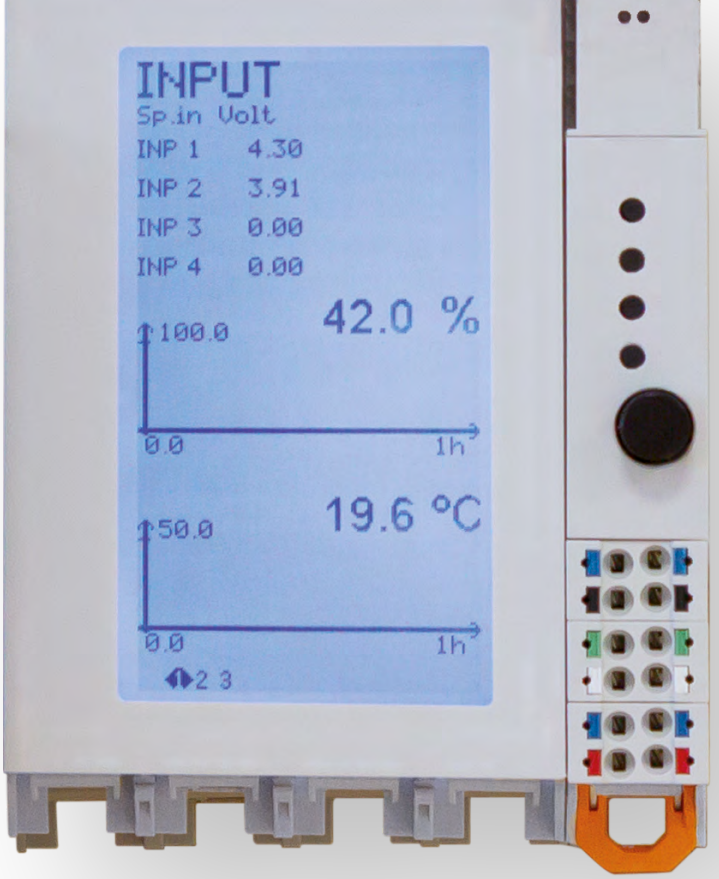

Easy assembly

High-quality top-hat rail housings with colour-coded and connection-friendly push-in terminals and sufficient terminal space offer maximum ease of installation and speed.

Best quality

With high-quality components, modern serial production, automated testing/calibration setups, and a 100% final inspection, you will be getting a product with the „Made in Germany" guarantee of quality.

General Technical Data	
Supply voltage	24 V DC
Plug-in terminals	(blocks of 4) with spring tension, locking of the plug-in terminals, color coding of the terminals, wire diameter max. 1.5 mm²
Assembly	mounting for DIN rails
Pull-up resistors	switchable via on-board DIP switch
Operating temperature	0... 50 ° C, max. 90% r.H.
Protection class	IP 20
Optional	DIN rail-eNET-system connector (2 required)
Approvals	CE, EAC, RoHs

FS1701

I/O - 8 Analog IN / Modbus Out (0-10 V oder 4-20 mA)

Messgrösse: -
Ausgang: Modbus RTU
Besondere Merkmale: 8 Analog-IN, Hutschienenmontage

Masszeichnung: S.374 #159 | Anschlusszeichnung: S.319 #074 | Preistabelle: S.419

Input	Version voltage - 8x 0-10 V DC, configurable, version current 8x 4-20 mA DC, configurable
Output	Modbus RTU
Switching to digital input, channel by channel, max. 24V DC	with voltage version
Resolution	11 BIT
Accuracy	version voltage +/- 10 mV, version current +/- 20 µA
Input resistance	voltage version - 320 kOhm, current version - 50 ohm
Current consumption	max. 50 mA
Configuration address, modes	via DIP switch onboard
Housing	approx. D 100 x W 38 x H 125 mm

Allgemeine Technische Daten S. 291

FS1702

I/O - Modbus In / 8 Analog Out (0-10 V oder 4-20 mA)

Messgrösse: -
Ausgang: Modbus RTU
Besondere Merkmale: 8 Analog-Out, Hutschienenmontage

Masszeichnung: S.375 #159 | Anschlusszeichnung: S.320 #075 | Preistabelle: S.419

Input	Version voltage - 8x 0-10 V DC, configurable, version current 8x 4-20 mA DC, configurable
Output	Modbus RTU
Switching to digital input, channel by channel, max. 24V DC	with voltage version
Resolution	11 BIT
Accuracy	version voltage +/- 10 mV, version current +/- 20 µA
Input resistance	voltage version - 320 kOhm, current version - 50 ohm
Current consumption	max. 50 mA
Configuration address, modes	via DIP switch onboard
Housing	approx. D 100 x W 38 x H 125 mm

Allgemeine Technische Daten S. 291

FS1703

I/O - Modbus In / 8 Relais Out (Wechsler)

Messgrösse: -
Ausgang: 8 x Relais
Besondere Merkmale: 8 Wechsler, Hutschienenmontage

Masszeichnung: S.375 #159 | Anschlusszeichnung: S.320 #076 | Preistabelle: S.419

Input	Modbus RTU
Output	8 floating change-over contacts, configurable; switching status display via LED, channel by channel
Switching outputs	SK III, max. 2A
Current consumption	max. 50mA + max. 20mA / channel
Configuration address, modes	via DIP switch onboard
Housing	approx. D 100 x W 95 x H 125 mm

Allgemeine Technische Daten S. 291

FS1704

Modbus - Servicedisplay

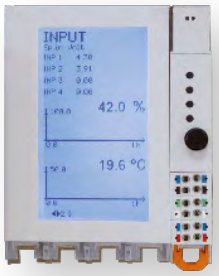

Messgrösse: -
Ausgang: Display
Besondere Merkmale: Konfigurierbare Anzeige, Hintergrundbeleuchtung

Masszeichnung: S.375 #159 | Anschlusszeichnung: S.320 #077 | Preistabelle: S.419

Input	Modbus RTU
Alarm transmitter (piezo)	freely programmable, volume approx. 85db at a distance of 10cm
Configuration address, modes	via menu
Switching Hysteresis Relay	can be entered in the register
Housing	approx. D 100 x W 90 x H 125 mm

Allgemeine Technische Daten S. 291

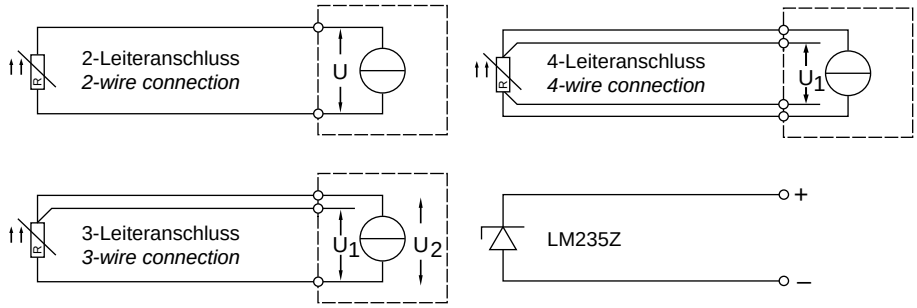

Connection 001

AF1/E, AF2/E, BF1/E, LF1/E, LF2/E, BF2/E, EF1/E, EF2/E, EF3/E, EF5/E, EF6/E, EF4/E, HE/E, HET/E, KP/E, KS/E, Kst/E, LP/E, KF1/E, KF2/E, KF3/E, MF/E, MWT/E, TF4/E, TF1/E, OF1/E, OF2/E, OF3/E, OF4/E, OF5/E, OF6/E, OF7/E, RF/E, TPF2/E, UP1/E, DF/E, RSF/E, ASF/E, TF5/E, TPF1/E, KT/E

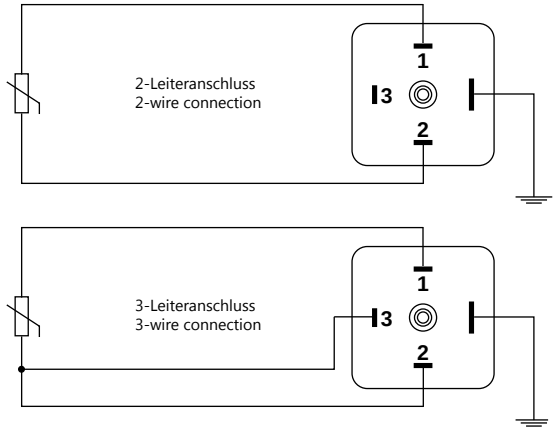

Connection 002

EF7/E, TF7/E

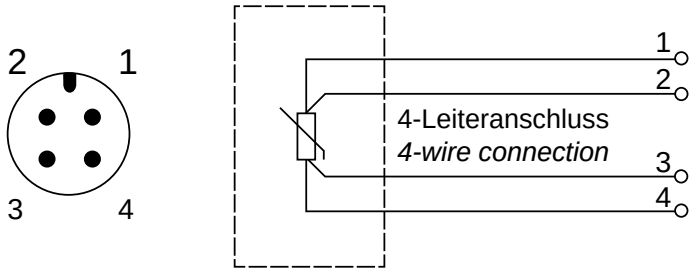

Connection 003

EF8/E, TF8/E

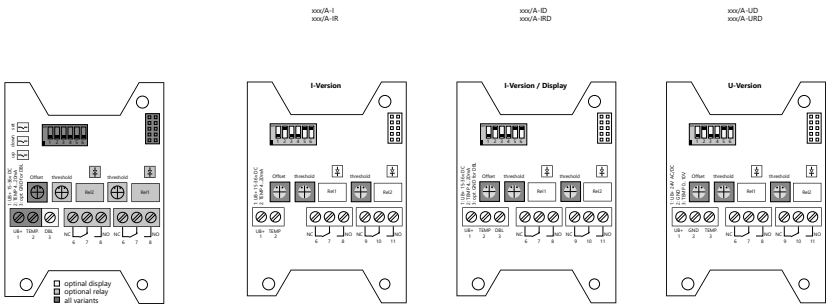

Connection 004

LM2/E, AM1/E, AM2/E, EM/E, EM2/E, KM/E, MM/E, LM1/E, AM5/E, EM5/E, KSM/E, KTM/E, OM1/E, OM3/E, OM4/E, TPM2/E, TPM1/E, MUD/E

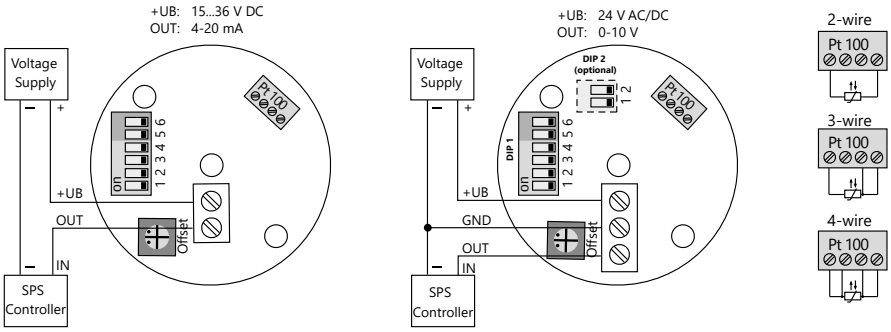

Achtung: Bei Parallelbetrieb mit 24 V AC Versorgung, ist der phasengleiche Anschluss aller Geräte zwingend notwendig (Kurzschlussgefahr)!
Attention: In parallel operation by a 24 V AC supply is the in-phase connection of all devices necessary (short-circuit danger)!

Connection 005

EM4/E, RM2/E, EM3/E, MUB/E

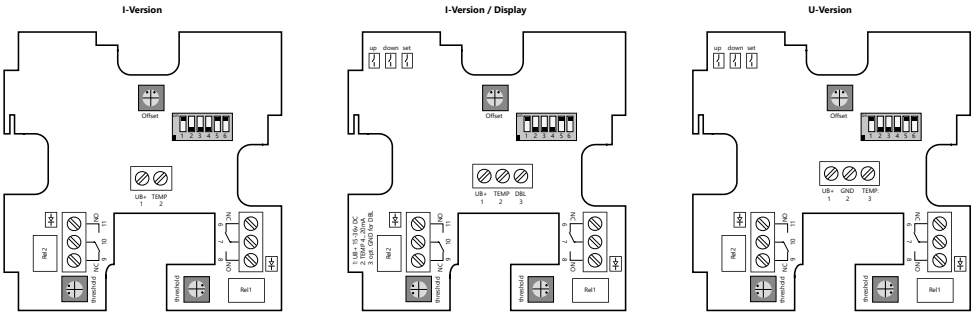

Connection 006

RTM1/E

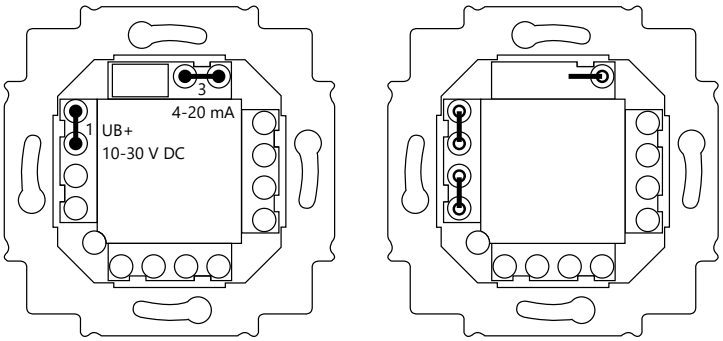

Achtung: Bei Parallebetrieb mit 24 V AC Versorgung, ist der phasengleiche Anschluss aller Geräte zwingend notwendig (Kurzschlussgefahr)!
Attention: In parallel operation by a 24 V AC supply is the in-phase connection of all devices necessary (short-circuit danger)!

Connection 007

UM1/E

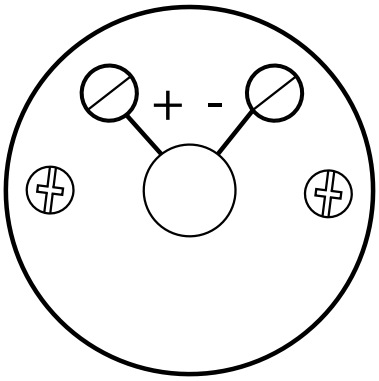

Connection 008

EF4/T

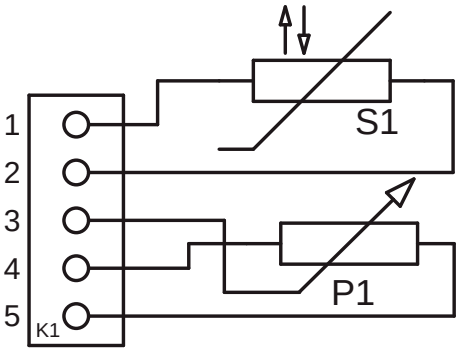

Connection 009

RF1/R

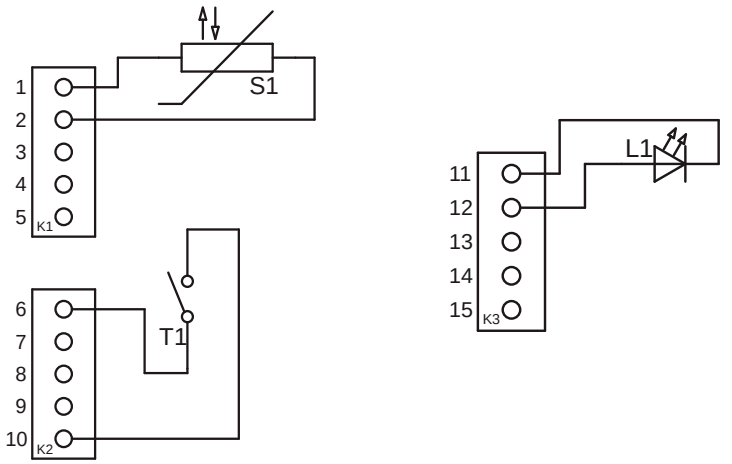

Connection 010

RF2/R

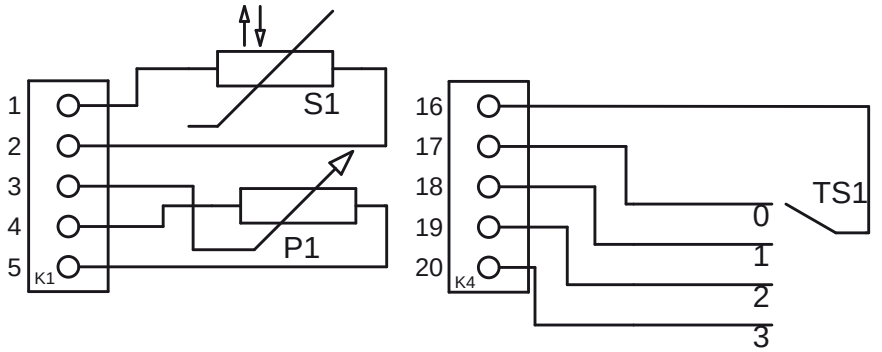

Connection 011

RF3/R

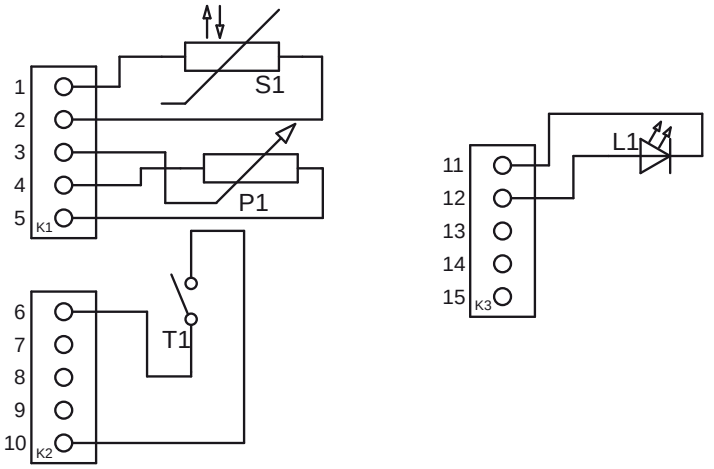

Connection 012

RF4/R

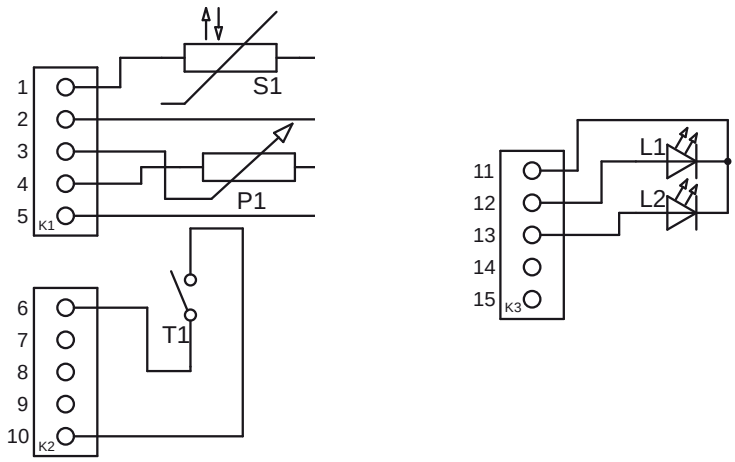

Connection 013

RF5/R

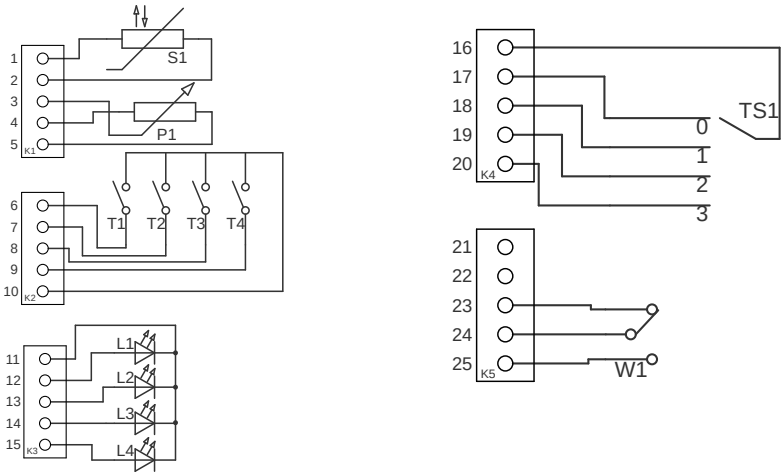

Connection 014

RF6/R

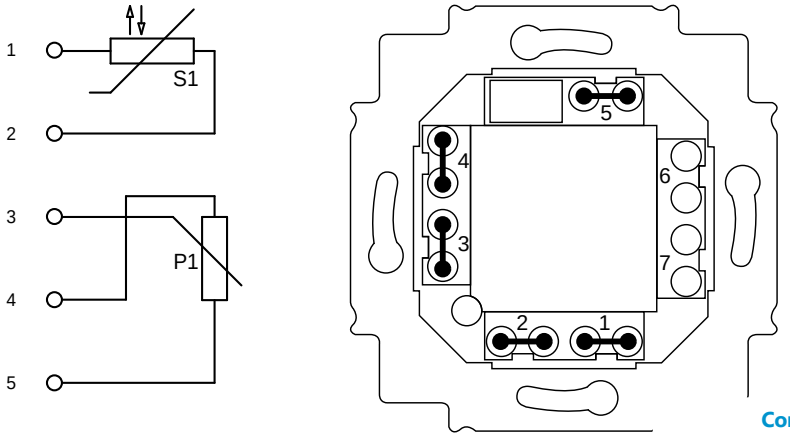

Connection 015

UP1/R

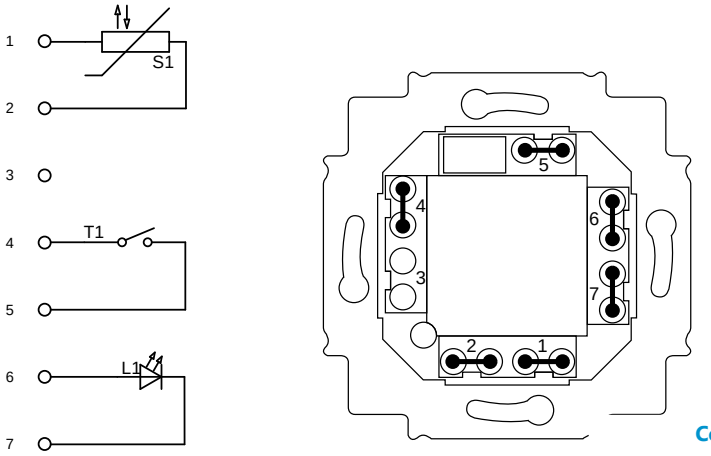

Connection 016

UP2/R

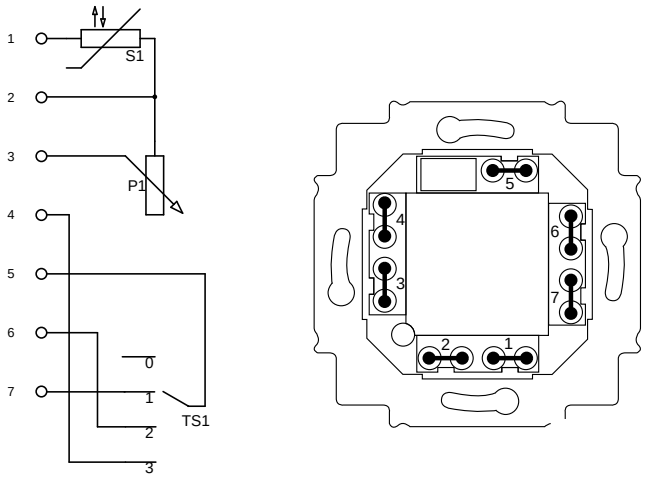

Connection 017

UP3/R

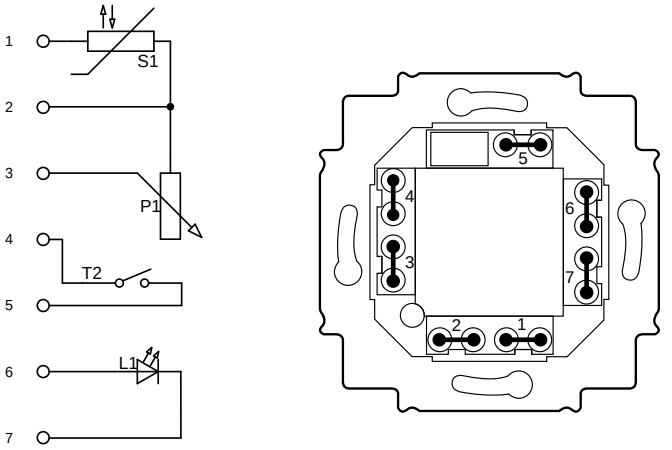

Connection 018

UP4/R

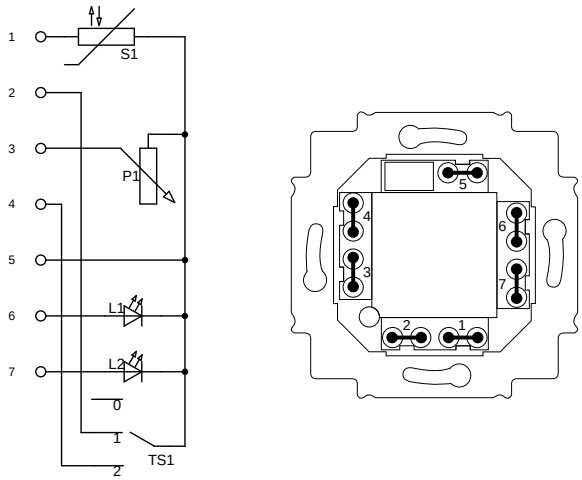

Connection 019

UP5/R

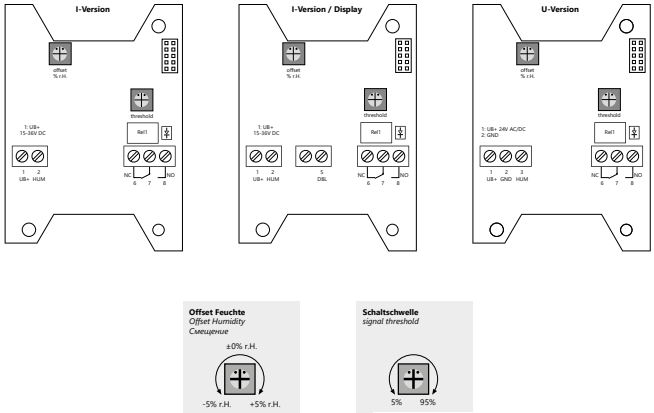

Connection 020

RAF/A, RAF(H)/A, RKF/A, RKF(H)/A, RRF(P)/A, RDF/A

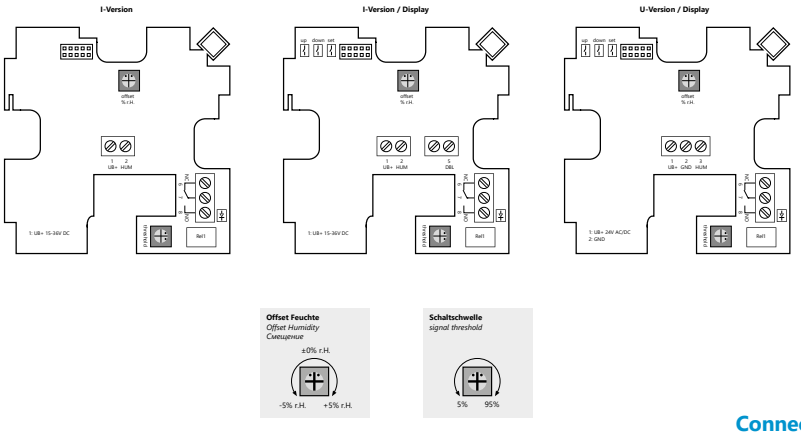

Connection 021

RRF/A

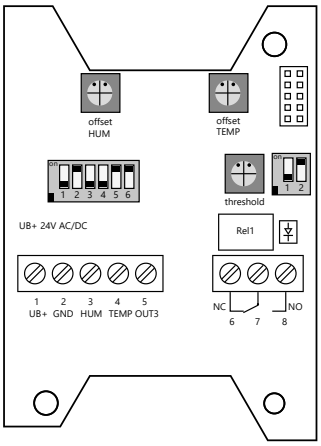

Connection 022

FS3110, FS3130

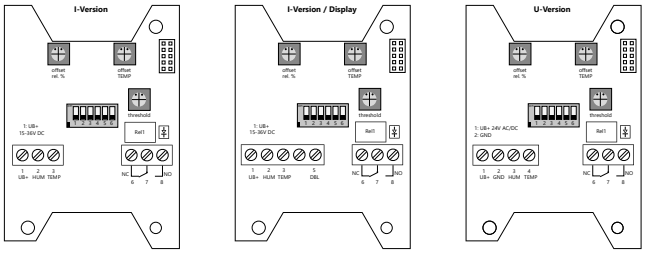

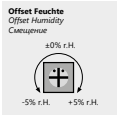

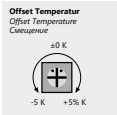

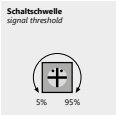

Connection 023

RAFT/A, RAFT(H)/A, RKFT/A, RKFT(H)/A, RRFT(P)/A, RDFT/A, FS3101

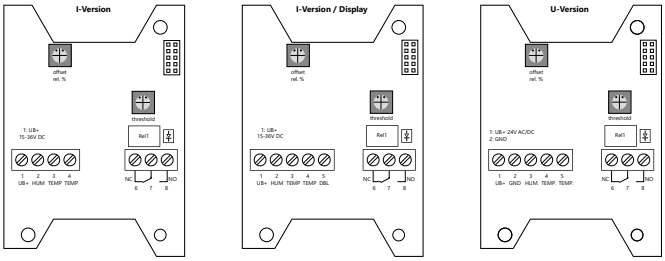

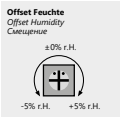

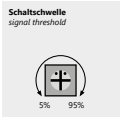

Connection 024

RAFTP/A, RKFTP/A, RRFTP(P)/A, FS3135

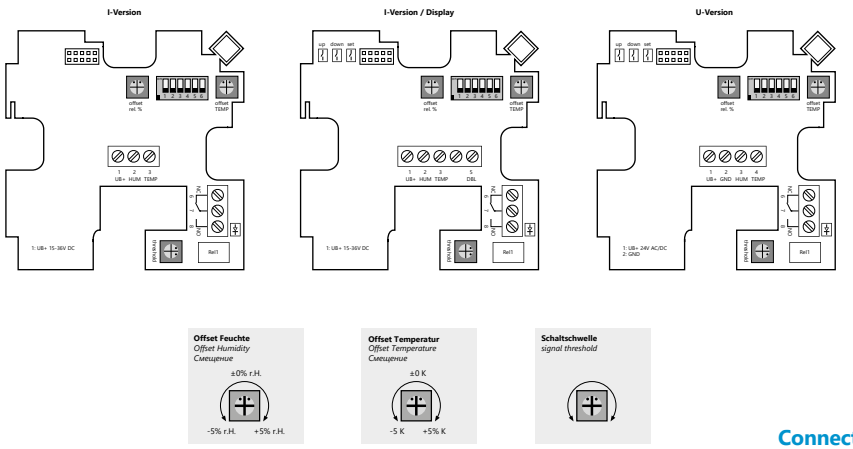

Connection 025

RRFT/A

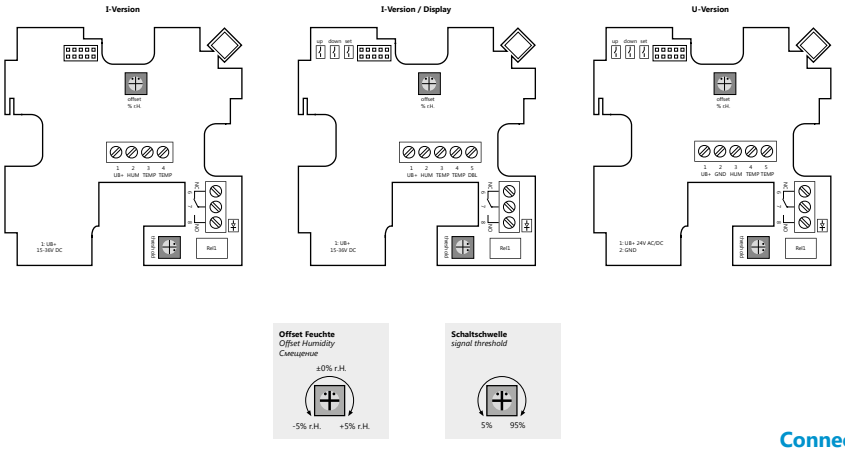

Connection 026

RRFTP/A

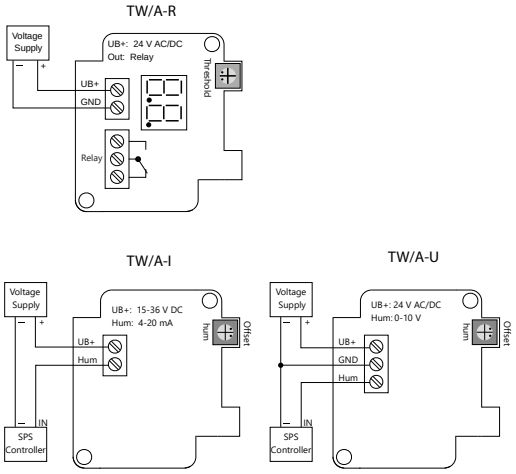

Connection 027

TW/A

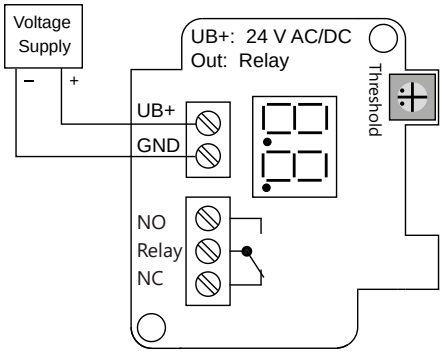

Connection 028

RAF/M. RKF/M

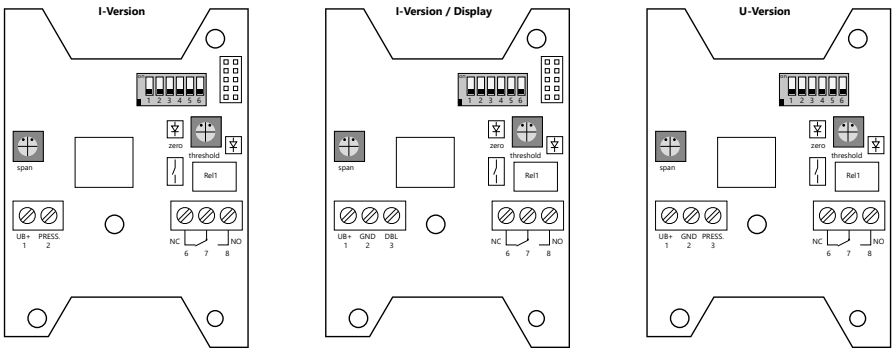

Connection 029

DMU/A, DMU2/A, AD/A

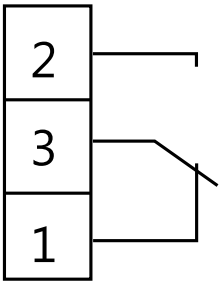

druckloser Zustand

pressure-less condition

Connection 030

DW/H, FS3610

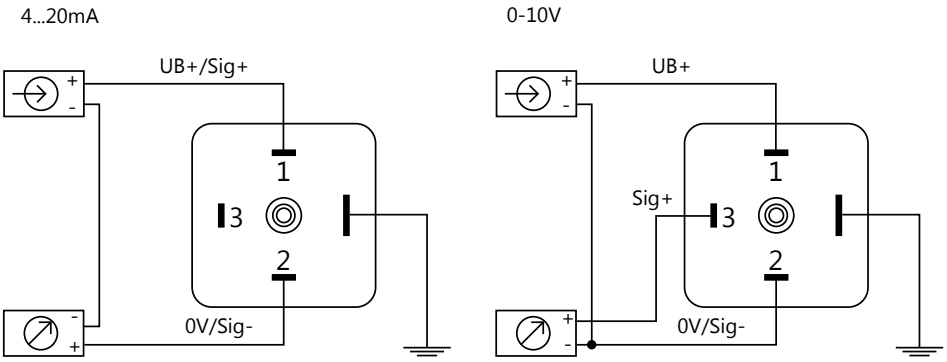

Connection 031

DT/D, ADF/A

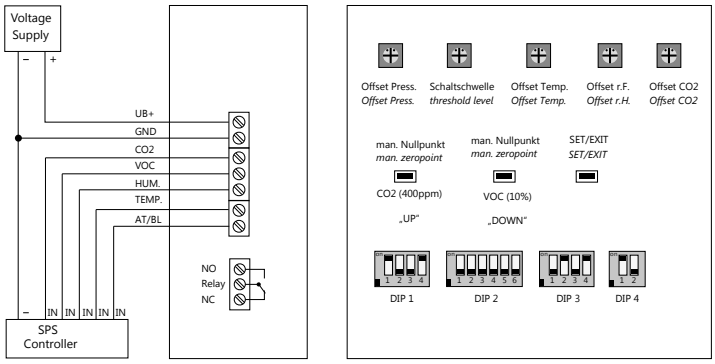

Achtung: Bei Parallelbetrieb mit 24 V AC Versorgung, ist der phasengleiche Anschluss aller Geräte zwingend notwendig (Kurzschlussgefahr)!
Attention: In parallel operation by a 24 V AC supply is the in-phase connection of all devices necessary (short-circuit dai

Connection 032

CO2-M/A

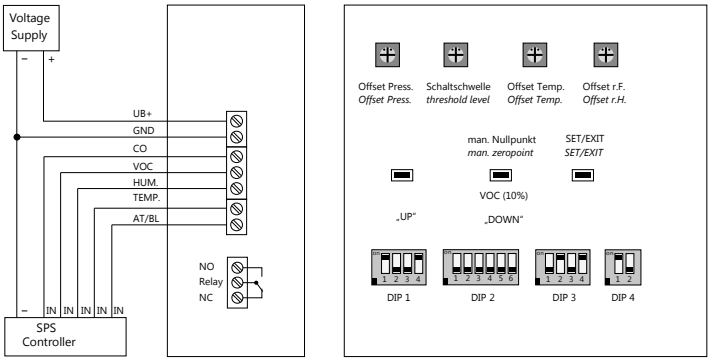

Achtung: Bei Parallelbetrieb mit 24 V AC Versorgung, ist der phasengleiche Anschluss aller Geräte zwingend notwendig (K
Attention: In parallel operation by a 24 V AC supply is the in-phase connection of all devices necessary (short-circuit danger)

Connection 033

CO-M/A

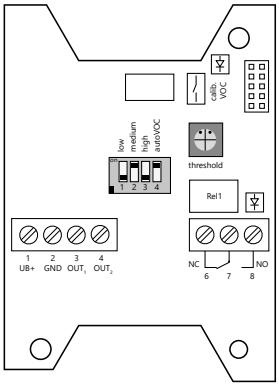

Schaltschwelle
signal threshold

Connection 034

KL/A, KLT/A

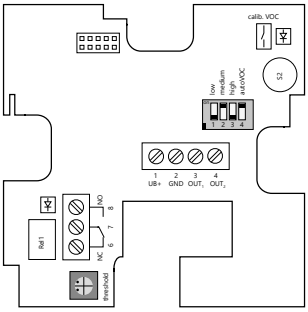

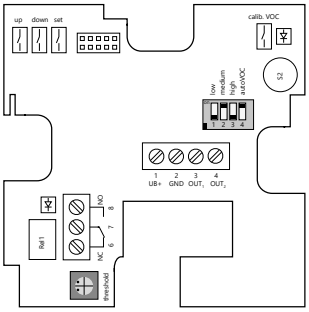

Empfindlichkeit VOC
Sensitivity VOC

Schaltschwelle
signal threshold

Connection 035

RL/A

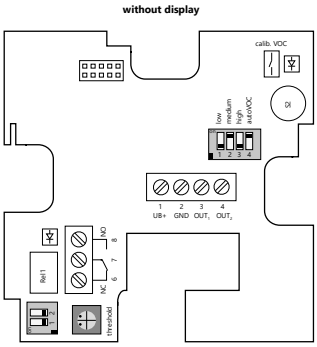

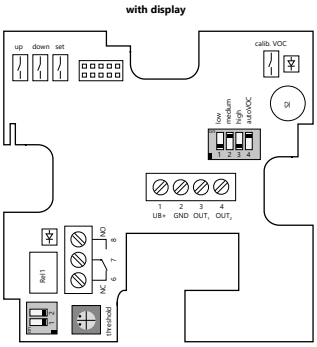

Schaltschwelle
signal threshold

Offset Temperatur
Offset Temperature
Смещение

Connection 036

RLT/A

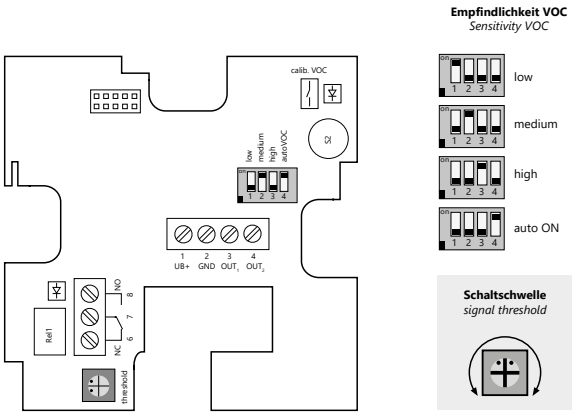

Connection 037

RL2/A

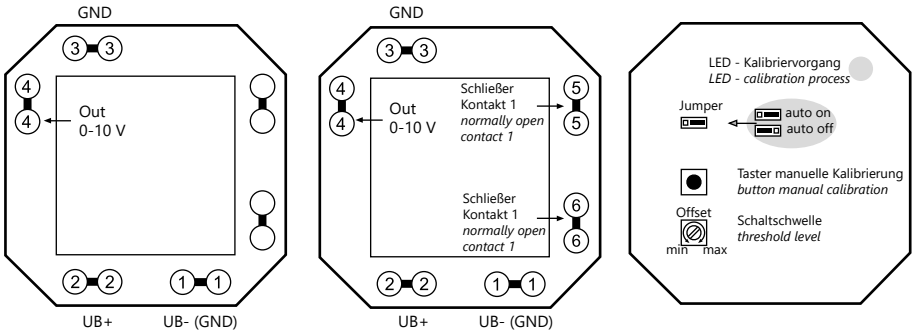

GND Anschlüsse 1 und 3 sind verbunden
GND contacts 1 and 3 are connected

Connection 038

RLU/A

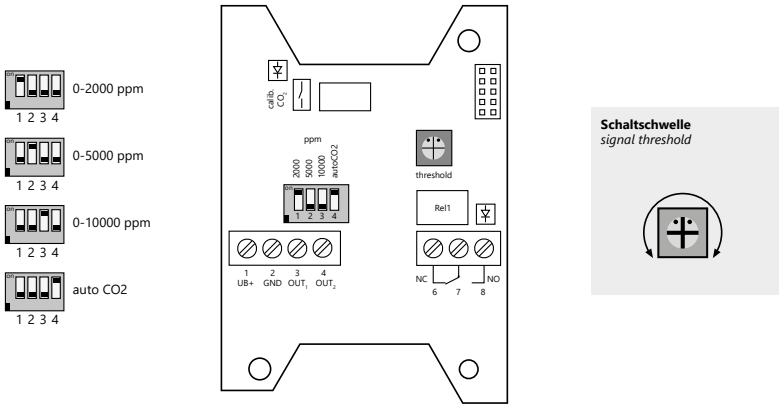

Connection 039

CO2-A/A. CO2-K/A. FS4408

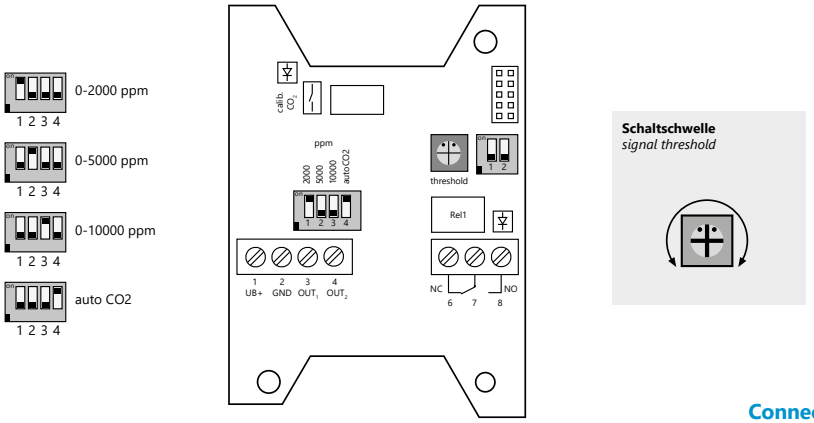

Connection 040

CO2T-A/A, CO2T-K/A

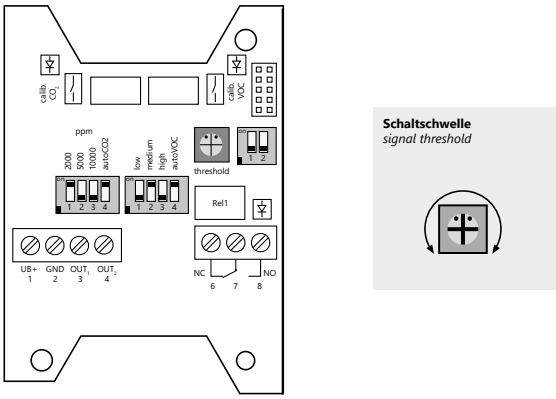

Connection 041

CO2VOC-A/A, CO2VOC-K/A

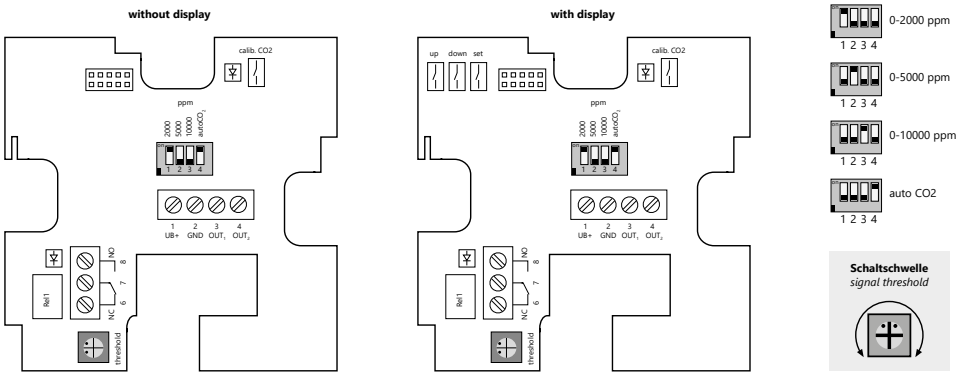

Connection 042

CO2-R/A

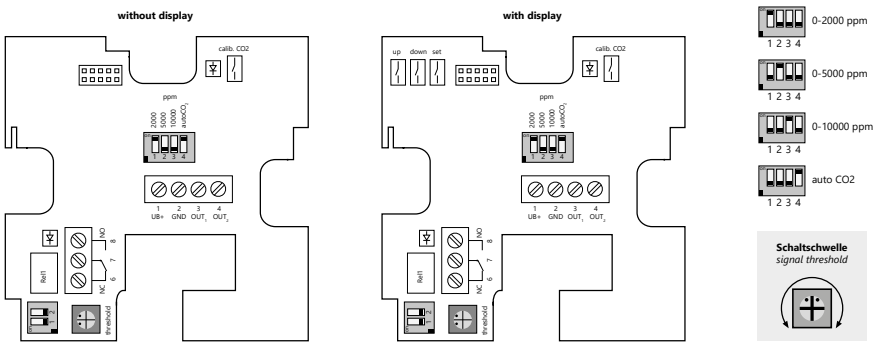

Connection 043

CO2T-R/A

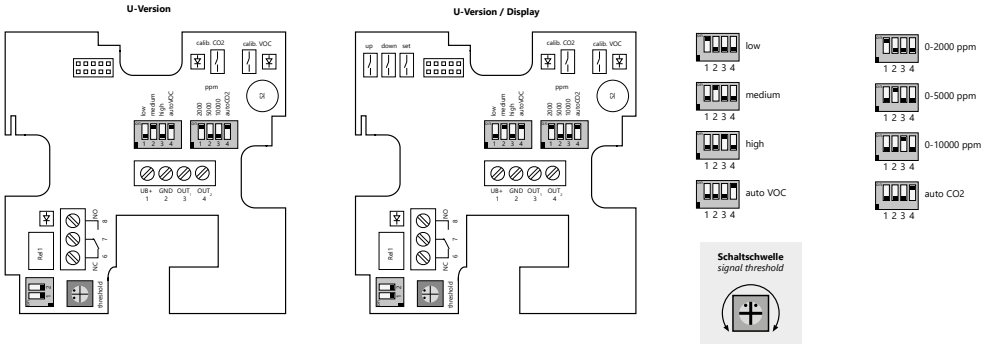

Connection 044

CO2VOC-R/A

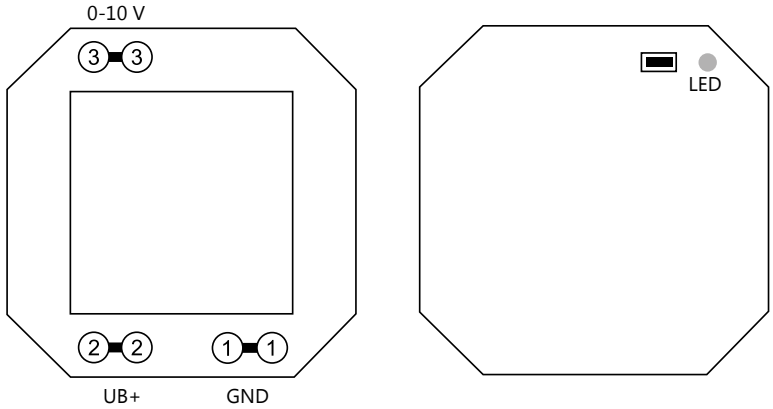

Connection 045

CO2-U/A

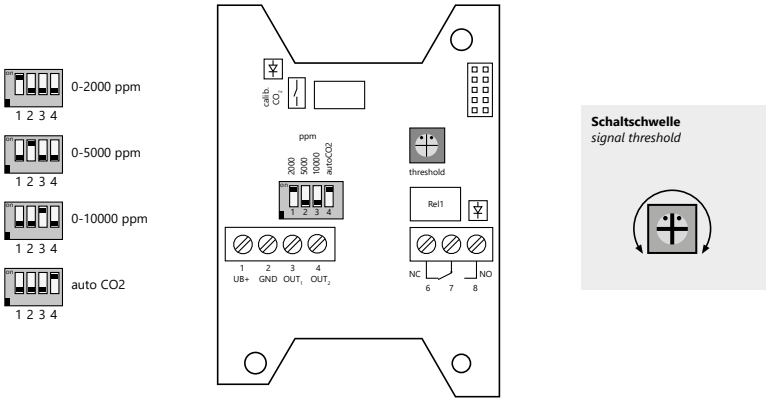

Connection 046

CO2-P/A

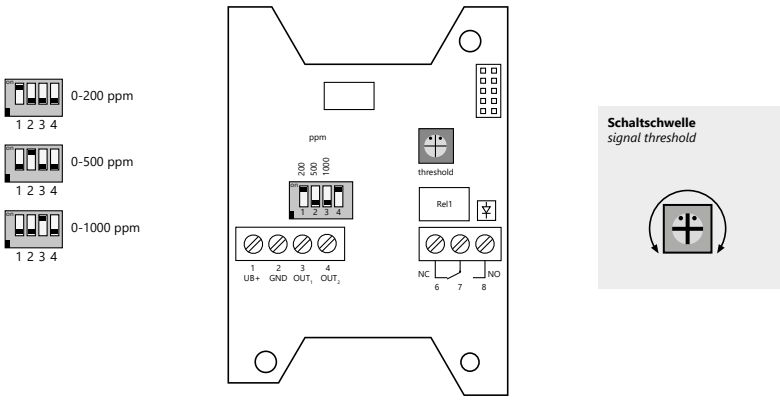

Connection 047

CO-A/A, CO-K/A

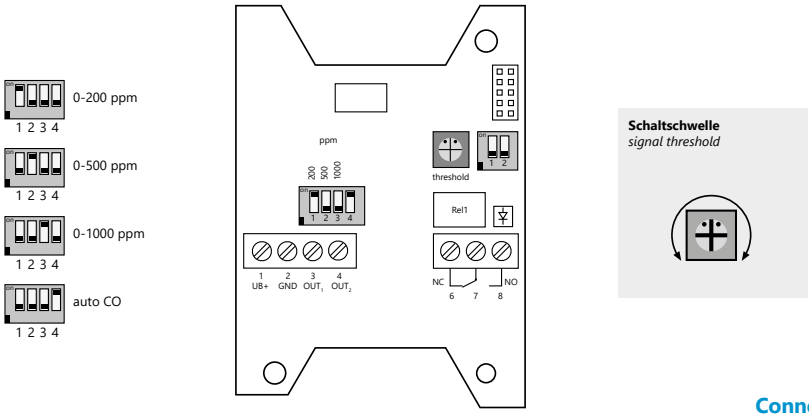

Connection 048

COT-A/A, COT-K/A

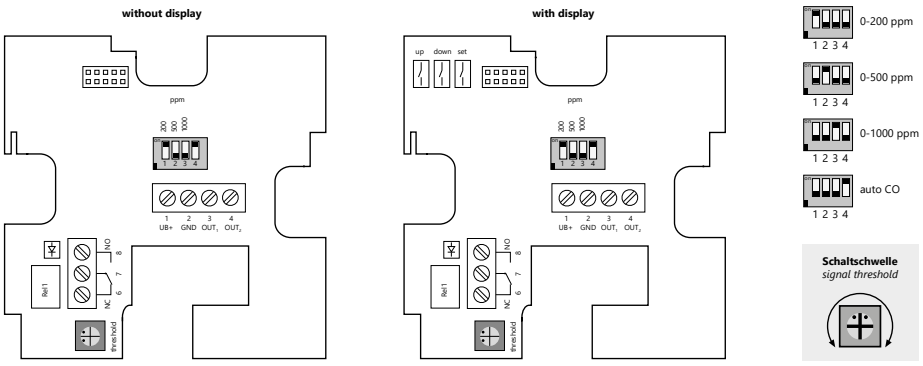

Connection 049

CO-R/A

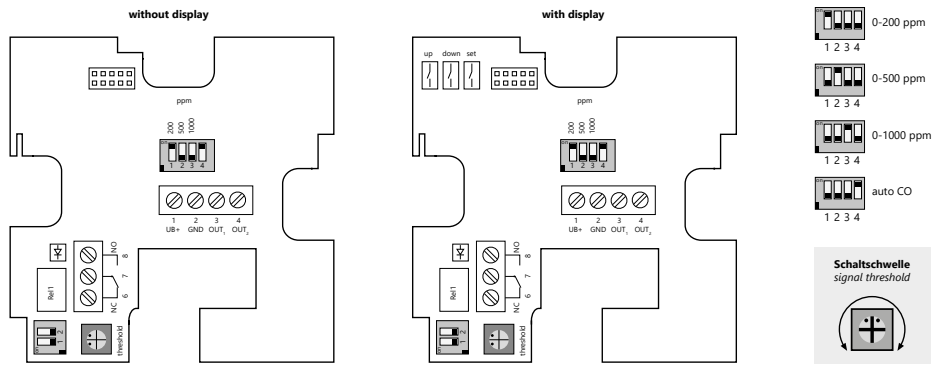

Connection 050

COT-R/A

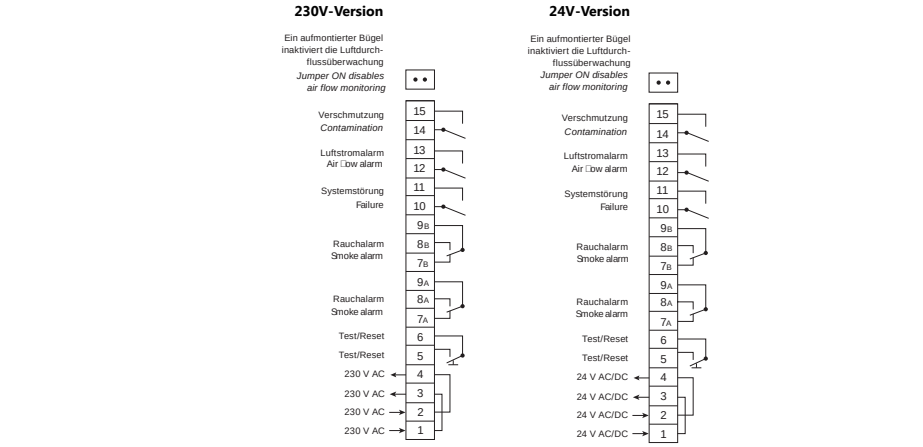

Connection 051

UG-5

WIRING DIAGRAM

Wiring diagram for smoke detector ST-P-OM with relay base STB-4SE-24VRL.

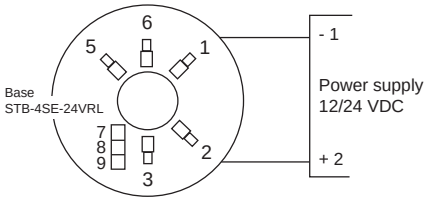

The alarm relay outputs are shown in alarm/no power on condition. Alarm relay: Change-over potential free contact, max 24V, 1A.

Connection 052

ST-P-OM

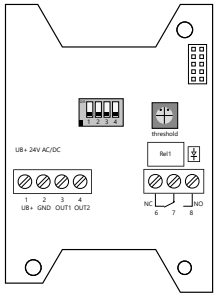

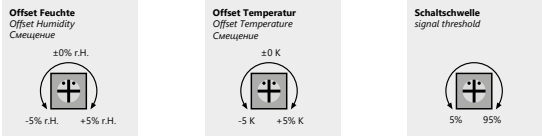

Connection 053

FS5020, FS5021

Strömung > Schwellwert
flow > threshold

Strömung < Schwellwert
flow < threshold

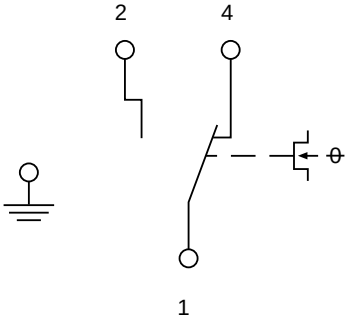

Connection 054

SRW/N

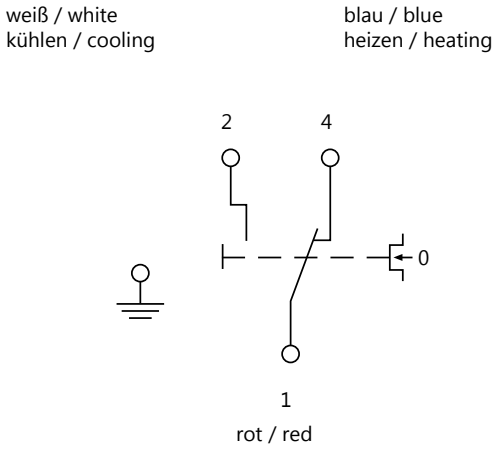

Connection 055

WFR/N

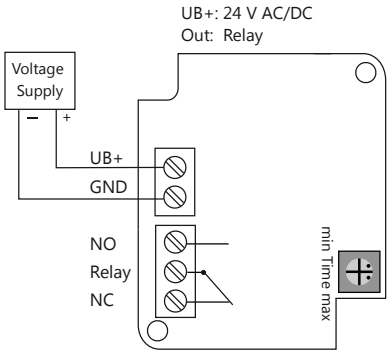

Achtung: Bei Parallebetrieb mit 24 V AC Versorgung, ist der phasengleiche Anschluss aller Geräte zwingend notwendig (Kurzschlussgefahr)!
Attention: In parallel operation by a 24 V AC supply is the in-phase connection of all devices necessary (short-cir

Connection 056

BFA/A, BFD/A

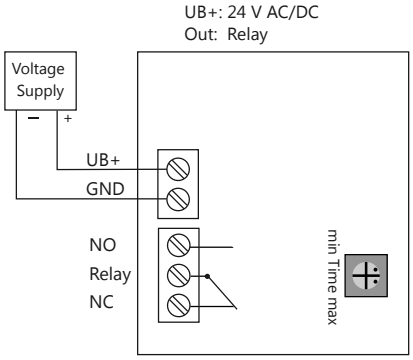

Achtung: Bei Parallebetrieb mit 24 V AC Versorgung, ist der phasengleiche Anschluss aller Geräte zwingend notwendig (Kurzschlussgefahr)!
Attention: In parallel operation by a 24 V AC supply is the in-phase connection of all devices necessary (short-circuit danger)!

Connection 057

BFR/A

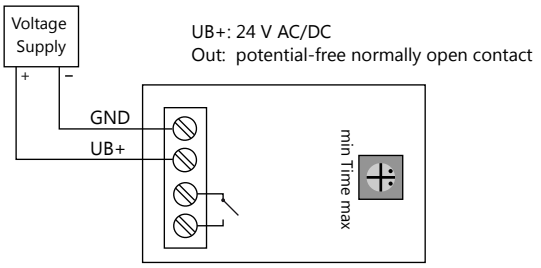

Achtung: Bei Parallelbetrieb mit 24 V AC Versorgung, ist der phasengleiche Anschluss aller Geräte zwingend notwendig (Kurzschlussgefahr)!
Attention: In parallel operation by a 24 V AC supply is the in-phase connection of all devices necessary (short-circuit danger)!

Connection 058

BFD2/A

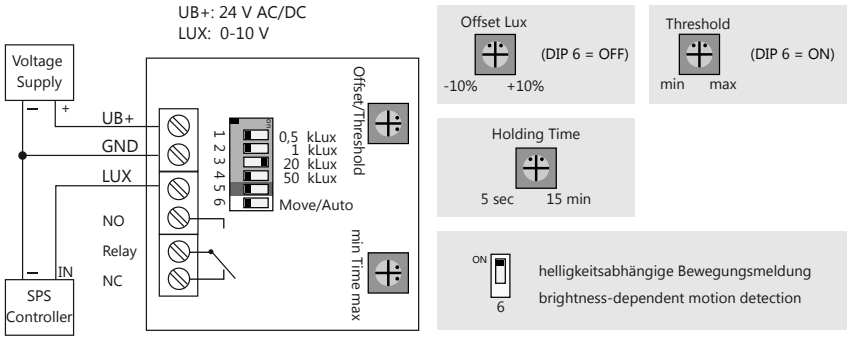

Achtung: Bei Parallelbetrieb mit 24 V AC Versorgung, ist der phasengleiche Anschluss aller Geräte zwingend notwendig (Kurzschlussgefahr)!
Attention: In parallel operation by a 24 V AC supply is the in-phase connection of all devices necessary (short-circu

Connection 059

BHA/A

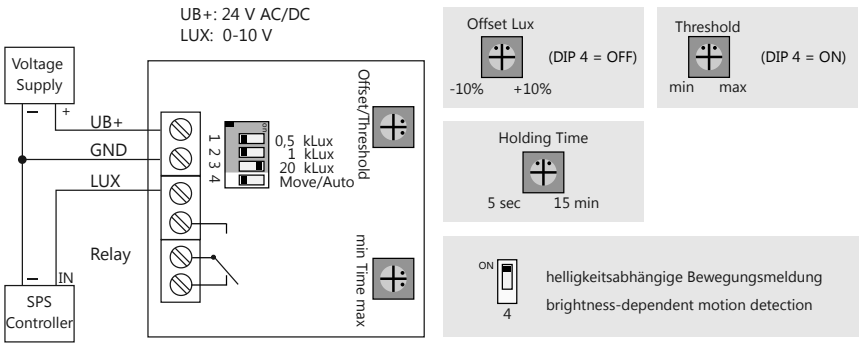

Achtung: Bei Parallelbetrieb mit 24 V AC Versorgung, ist der phasengleiche Anschluss aller Geräte zwingend notwendig (Kurzschlussgefahr)!
Attention: In parallel operation by a 24 V AC supply is the in-phase connection of all devices necessary (short-circ

Connection 060

BHR/A

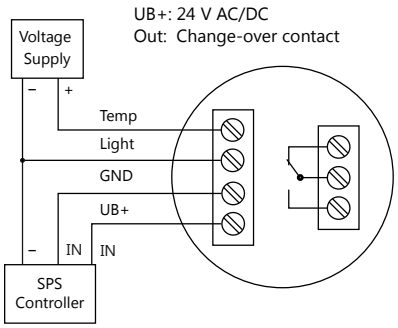

Achtung: Bei Parallebetrieb mit 24 V AC Versorgung, ist der phasengleiche Anschluss aller Geräte zwingend notwendig (Kurzschlussgefahr)!
Attention: In parallel operation by a 24 V AC supply is the in-phase connection of all devices necessary (short-circuit danaer)!

Connection 061

BHT-D/A

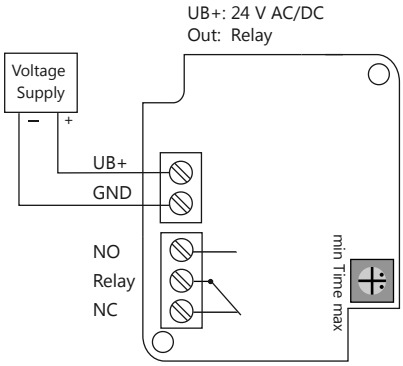

Achtung: Bei Parallebetrieb mit 24 V AC Versorgung, ist der phasengleiche Anschluss aller Geräte zwingend notwendig (Kurzschlussgefahr)!
Attention: In parallel operation by a 24 V AC supply is the in-phase connection of all devices necessary (short-circuit danger)!

Auswahl Helligkeits-Messbereich
Brightness-Measurement range options

0,5 kLux

1 kLux

2 kLux

5 kLux

10 kLux

20 kLux

50 kLux

100 kLux

4-20 mA

0-10 V

Offset Helligkeit
Offset Brightness
Освещённость

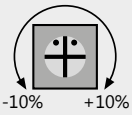

Connection 062

HFD/A. HFA/A

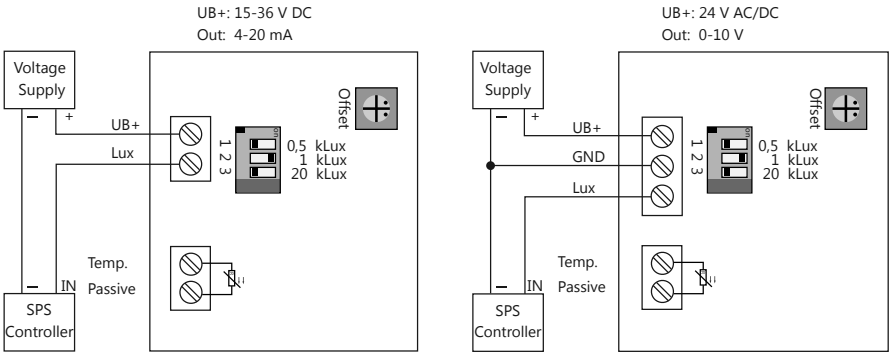

Achtung: Bei Parallebetrieb mit 24 V AC Versorgung, ist der phasengleiche Anschluss aller Geräte zwingend notwendig (Kurzschlussgefahr)!
Attention: In parallel operation by a 24 V AC supply is the in-phase connection of all devices necessary (short-circu

Connection 064

HFR/A

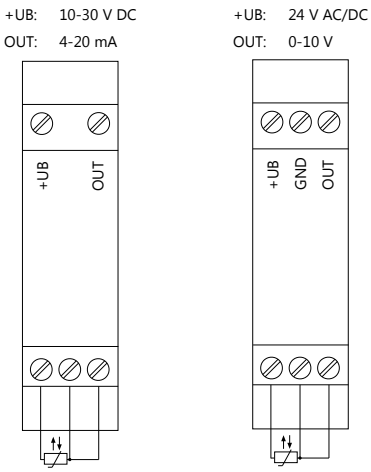

Connection 065

MUH/E

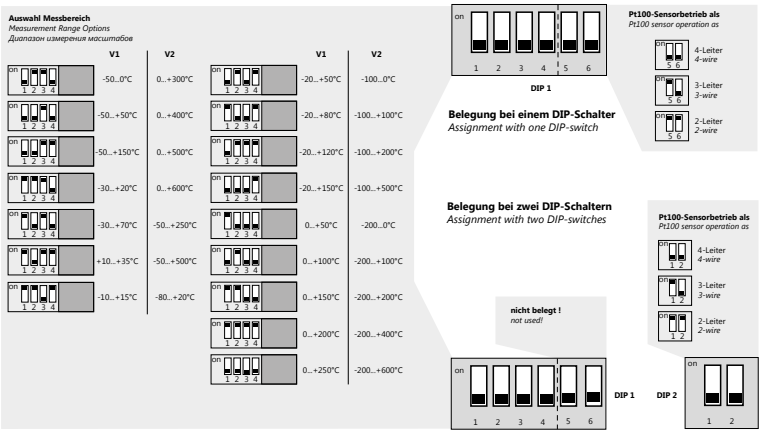

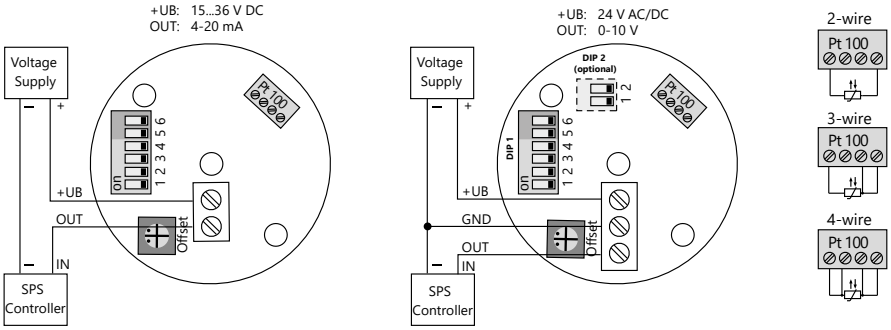

Achtung: Bei Parallelbetrieb mit 24 V AC Versorgung, ist der phasengleiche Anschluss aller Geräte zwingend notwendig (Kurzschlussgefahr)!
Attention: In parallel operation by a 24 V AC supply is the in-phase connection of all devices necessary (short-circuit danger)!

Connection 066

MUB/E

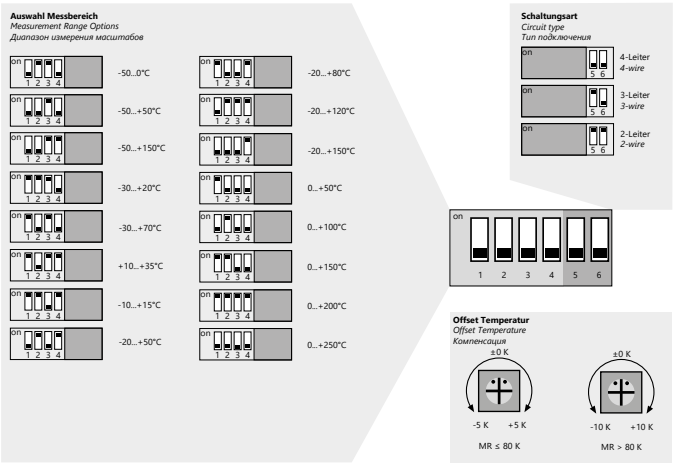

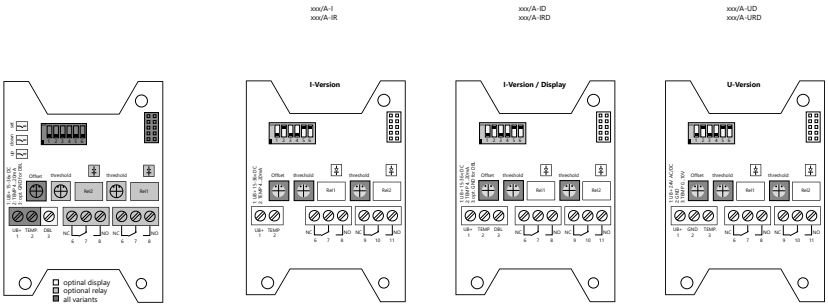

Connection 067

MUD/E

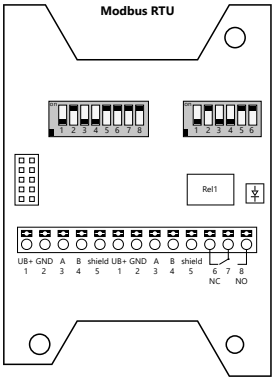

Connection 068

FS1021, FS1030, FS1001, FS1002, FS1022, FS1023,FS1040, FS1041, FS1042, FS1043, FS1050, FS1051, FS1052, FS1053, FS1060, FS1100, FS1101, FS1120, FS1121, FS1135, FS1140, FS1141, FS1200, FS1205, FS1300, FS1301, FS1308, FS1309, FS1320, FS1321, FS1420, FS1421, FS1500, FS1540

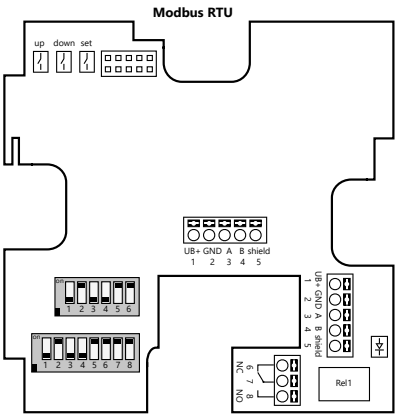

Connection 069

FS1080, FS1180, FS1380, FS1381, FS1580

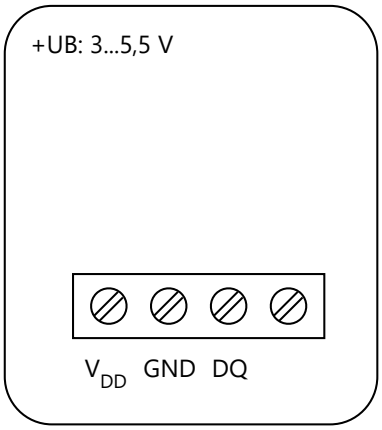

Connection 070

LF2/B-1W, RF/B-1W, TF1/B-1W

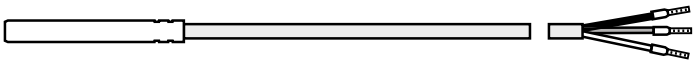

Connection 071

KS/B-1W

U+	*braun/brown*
U-	*grün/green*
Shield	*grau/grey*

Connection 072
FS3540

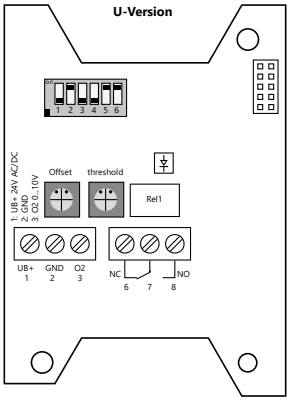

Connection 073
FS4309

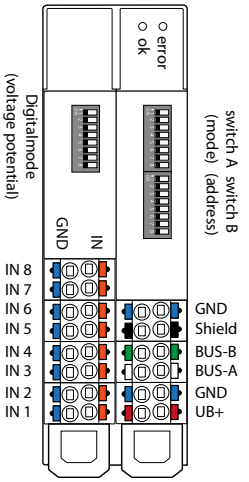

Connection 074
FS1701

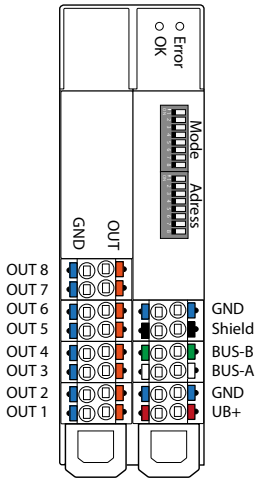

Connection 075

FS1702

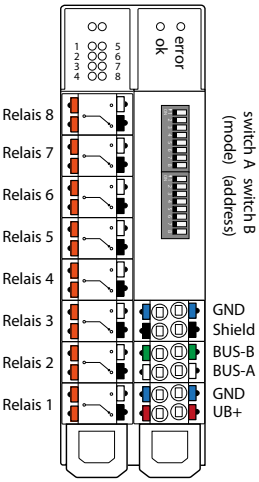

Connection 076

FS1703

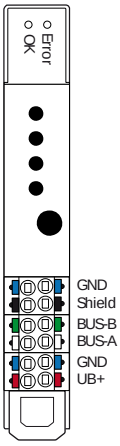

Connection 077

FS1704

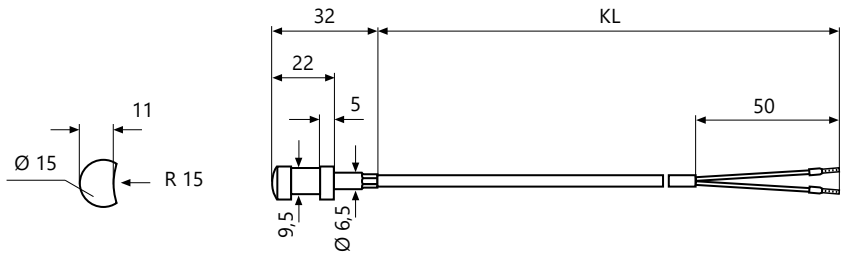

Dimensional Drawing 001

LF1/E

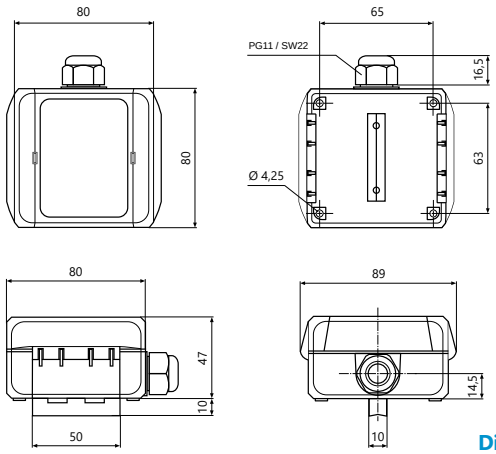

Dimensional Drawing 002

LF2/B-1W. LF2/E. LM2/E

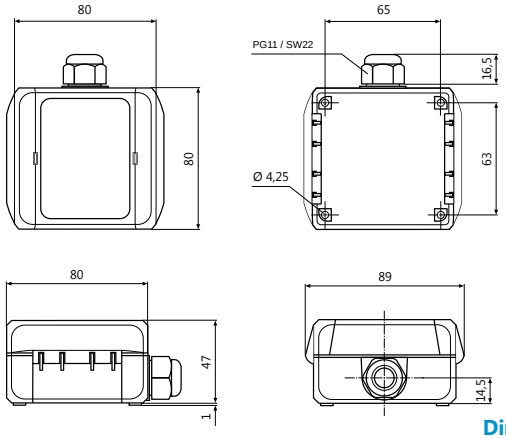

Dimensional Drawing 003

AF1/E, AM1/E

80mm

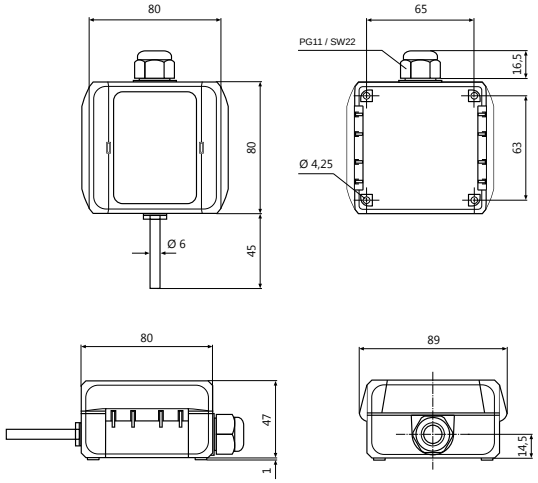

Dimensional Drawing 004

AF2/E, AM2/E

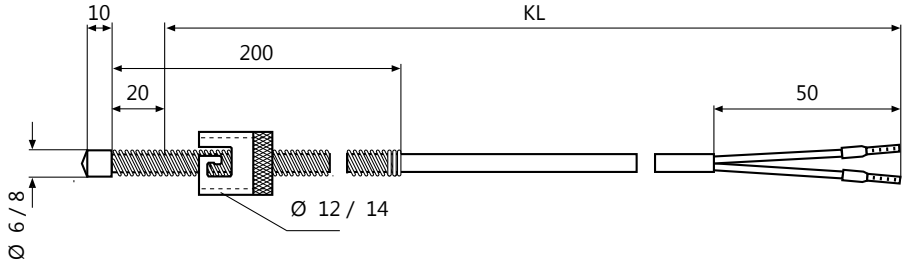

Dimensional Drawing 005

BF1/E

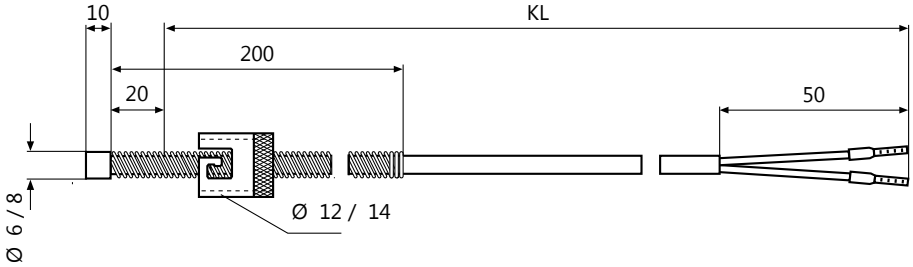

Dimensional Drawing 006

BF2/E

80mm

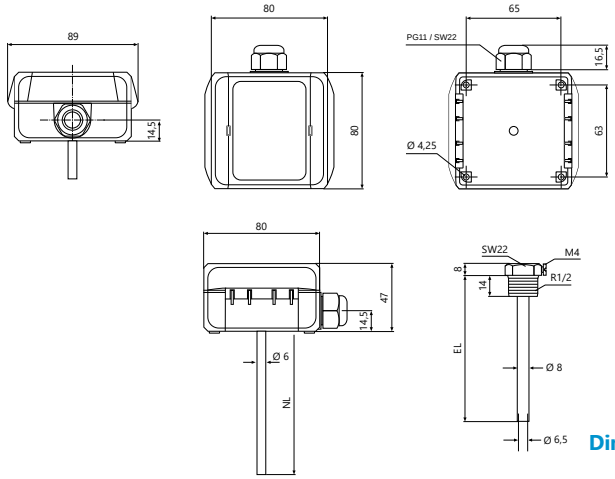

Dimensional Drawing 007

EF1/E, EM/E

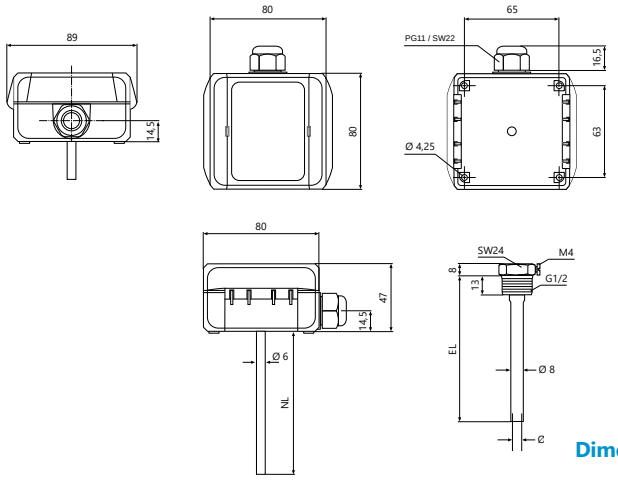

Dimensional Drawing 008

EF2/E, EM2/E

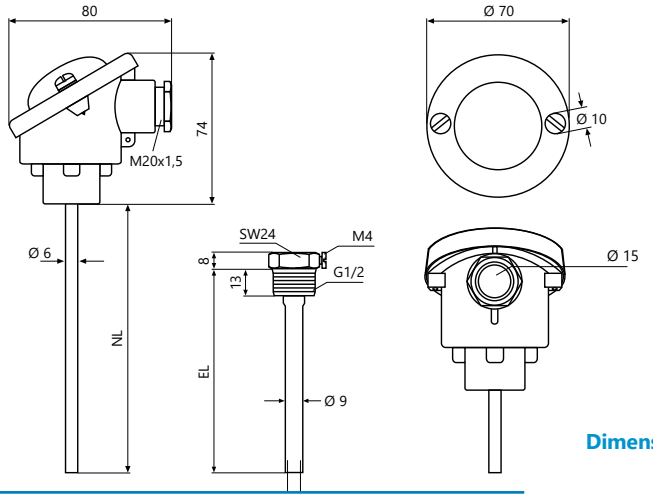

Dimensional Drawing 009

EF3/E

80mm

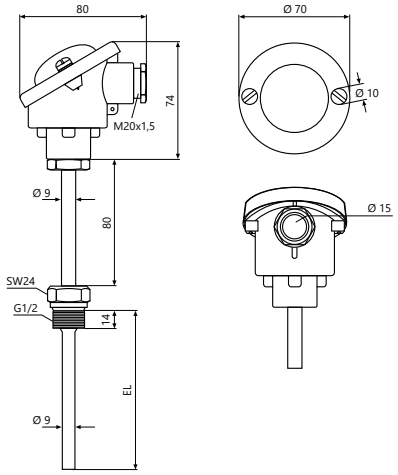

Dimensional Drawing 010

EF4/E, EM4/E, RM2/E, EF4/T

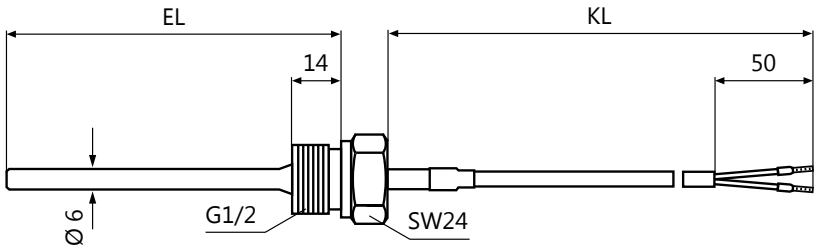

Dimensional Drawing 011

EF5/E

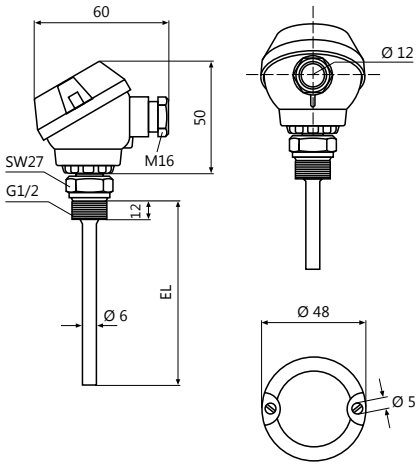

Dimensional Drawing 012

EF6/E

80mm

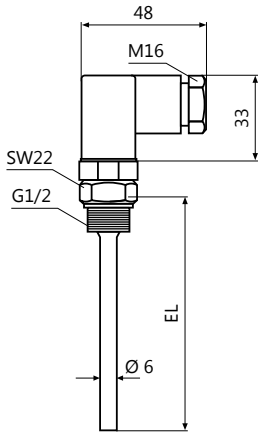

Dimensional Drawing 013

EF7/E

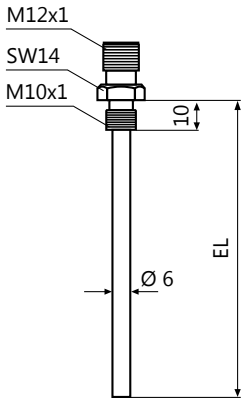

Dimensional Drawing 014

EF8/E

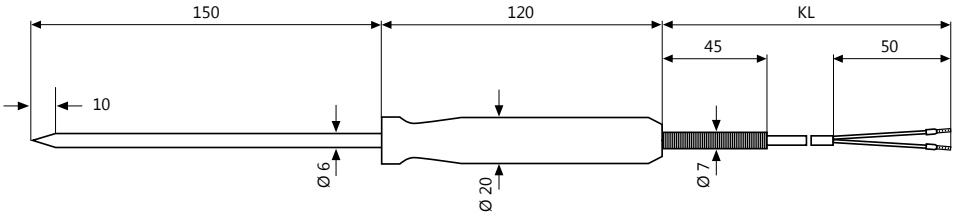

80mm

Dimensional Drawing 015

HE/E

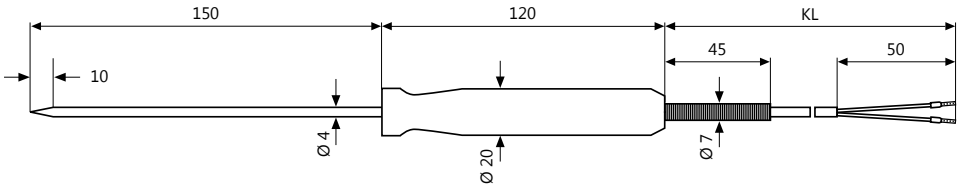

Dimensional Drawing 016

HET/E

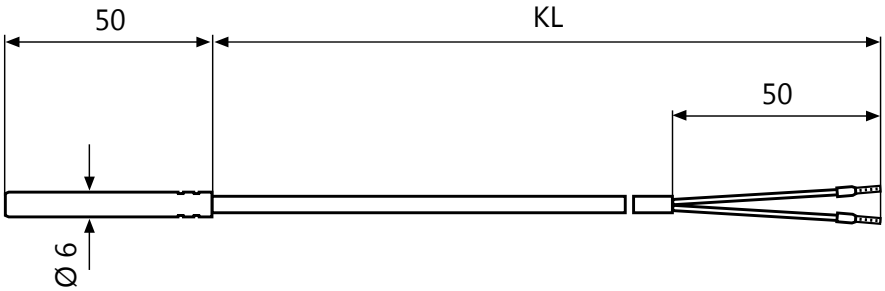

Dimensional Drawing 017

KP/E

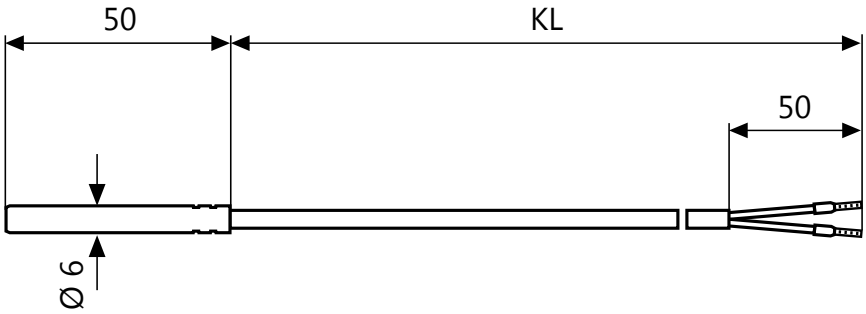

Dimensional Drawing 018

KS/E

80mm

Dimensional Drawing 019

KSt/E

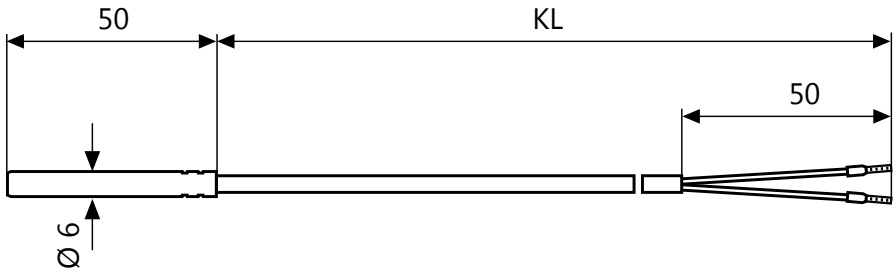

Dimensional Drawing 020

KT/E

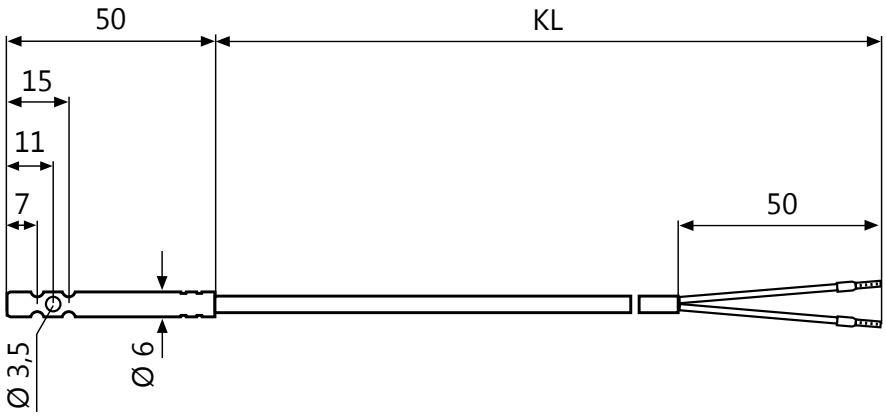

Dimensional Drawing 021

LP/E

80mm

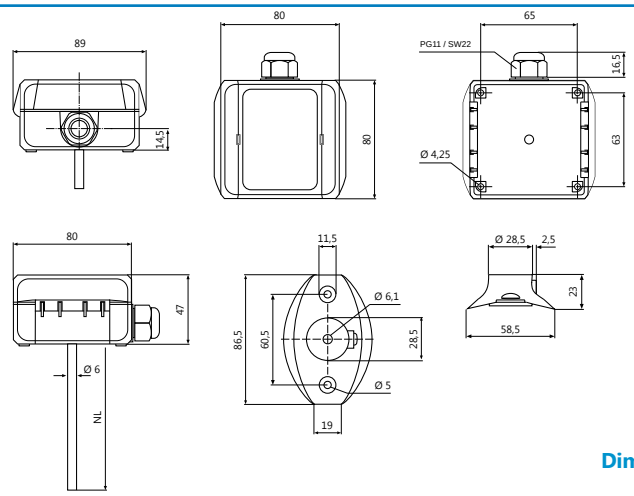

Dimensional Drawing 022

KF1/E, KM/E, FS1021

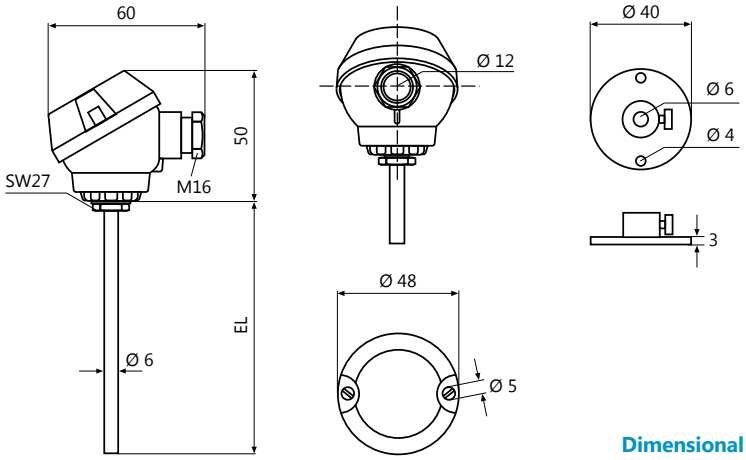

Dimensional Drawing 023

KF2/E

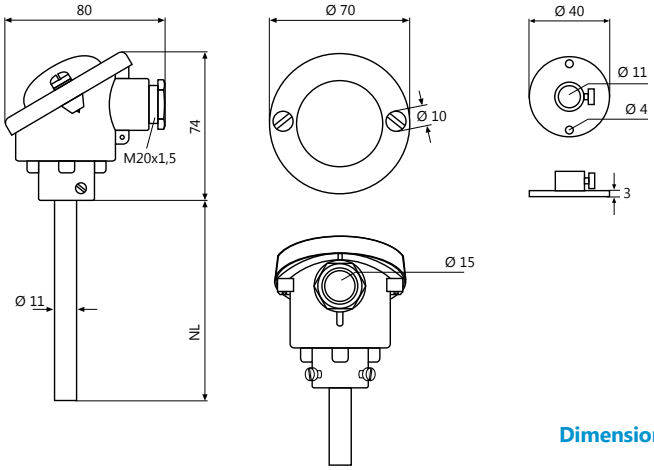

Dimensional Drawing 024

KF3/E

80mm

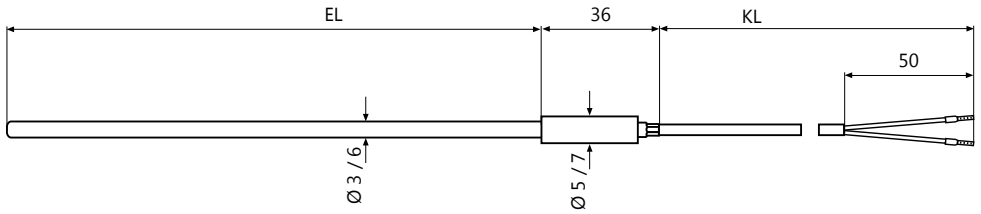

Dimensional Drawing 025

MWT/E

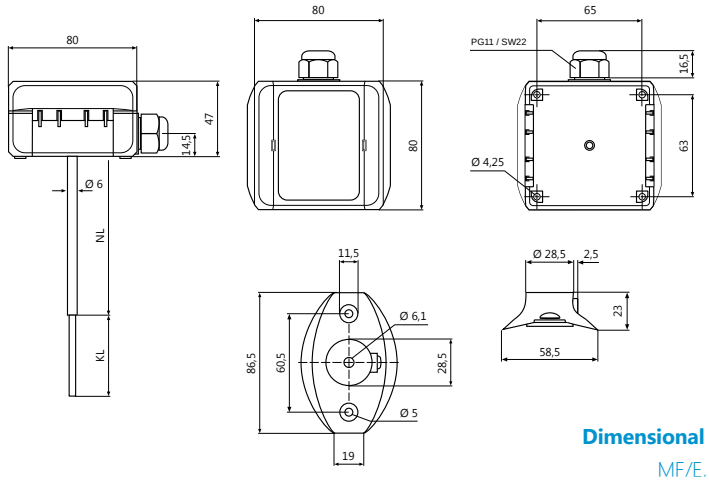

Dimensional Drawing 026

MF/E, MM/E, FS1030

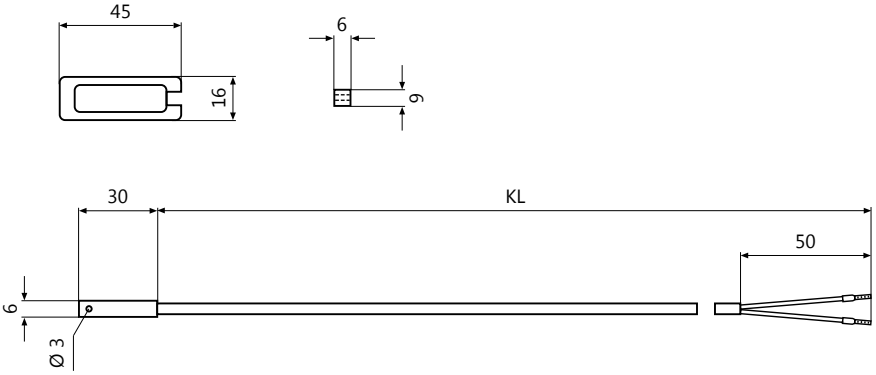

Dimensional Drawing 027

OF1/E

80mm

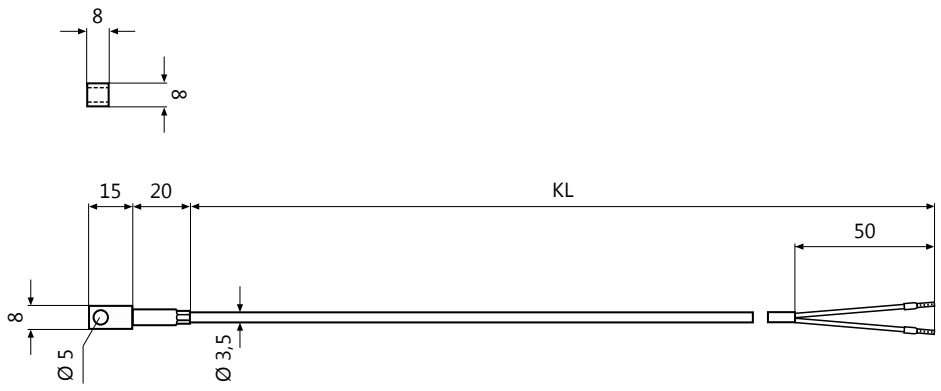

Dimensional Drawing 028

OF2/E

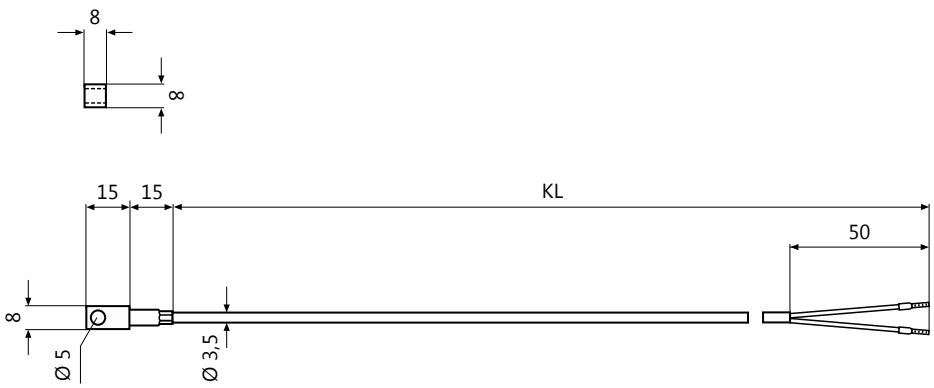

Dimensional Drawing 029

OF3/E. OF5/E

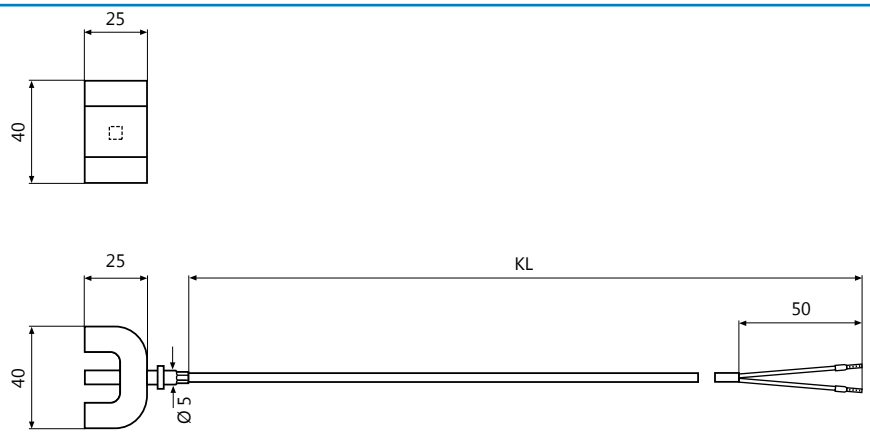

Dimensional Drawing 030

OF4/E

80mm

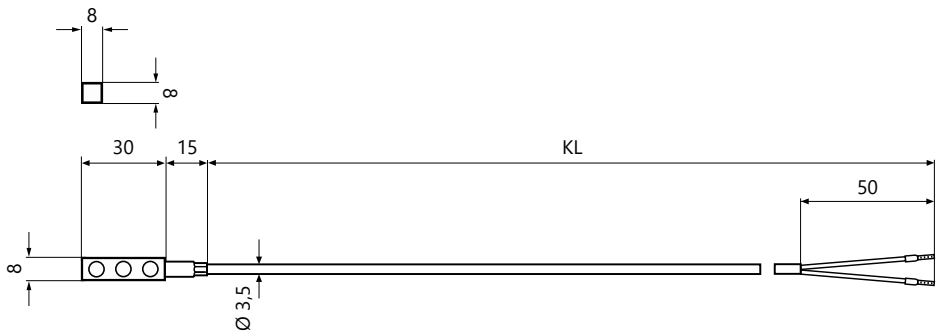

Dimensional Drawing 031

OF6/E

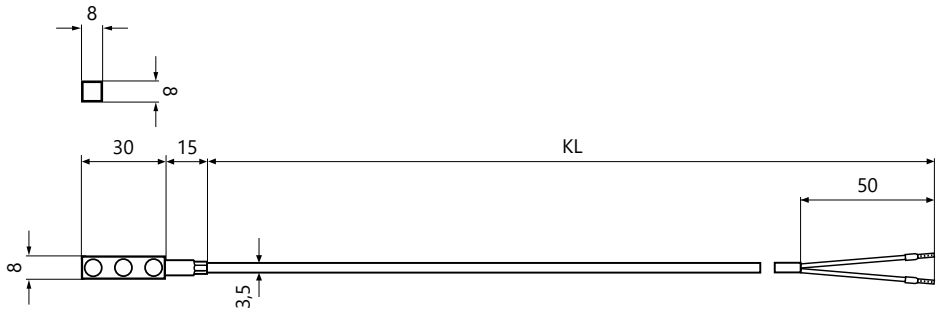

Dimensional Drawing 032

OF7/E

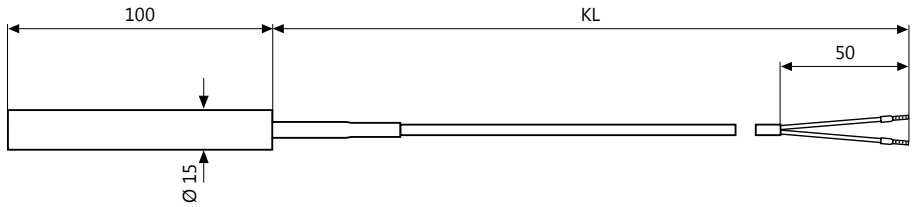

80mm

Dimensional Drawing 033

TPF2/E

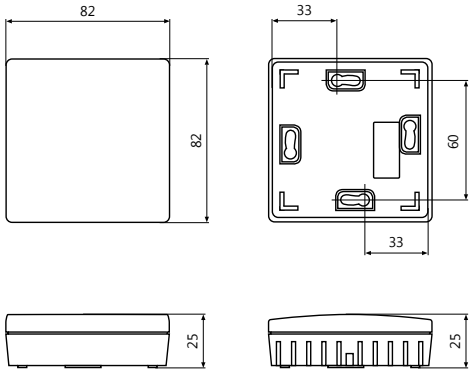

Dimensional Drawing 034

RF/E, RTM1/E, RRF/A, RRFT/A, RRFTP/A, RL/A, RLT/A, RL2/A
CO2-R/A, CO2T-R/A, CO2VOC-R/A, CO-R/A, COT-R/A, FS1080, RF/B-1W, FS1180, FS1380, FS1381

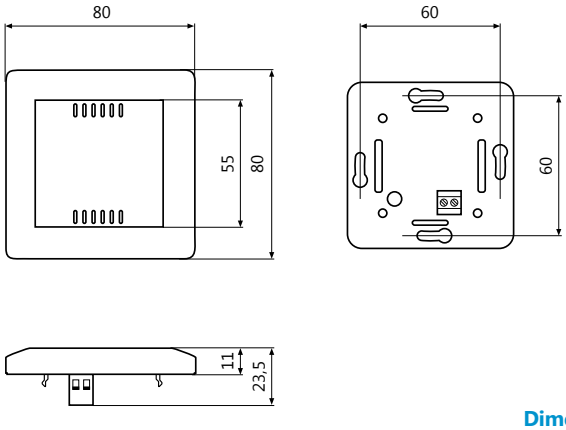

Dimensional Drawing 035

UP1/E

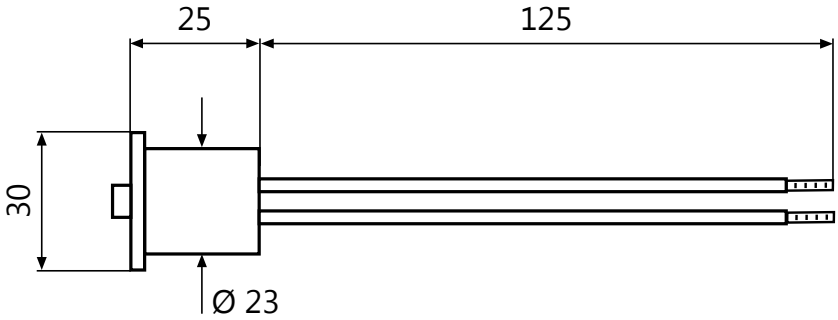

Dimensional Drawing 036

DF/E

80mm

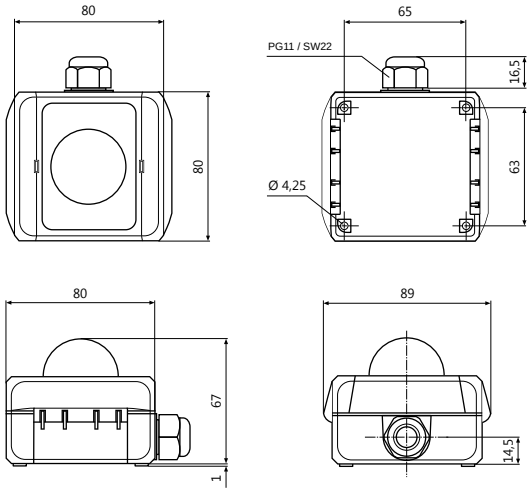

Dimensional Drawing 037

ASF/E

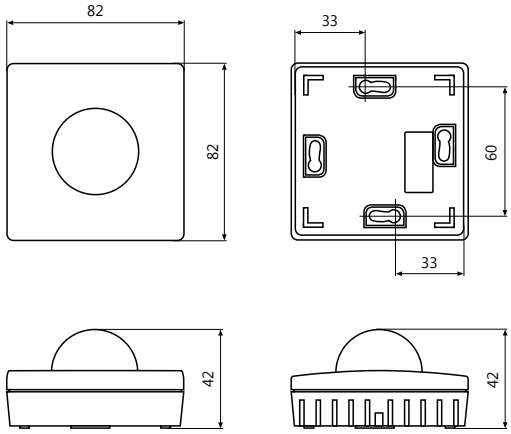

Dimensional Drawing 038

RSF/E

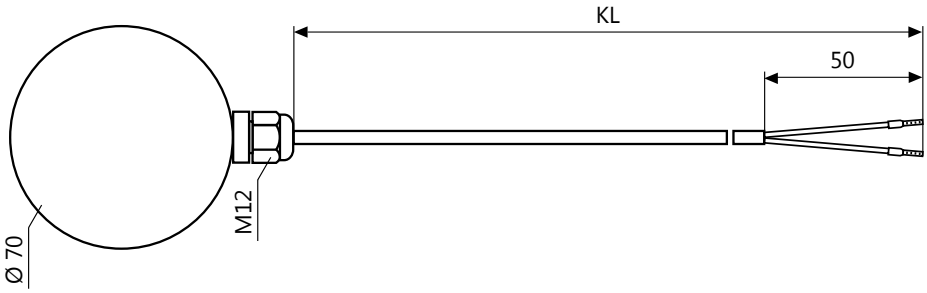

80mm

Dimensional Drawing 039

TPF1/E

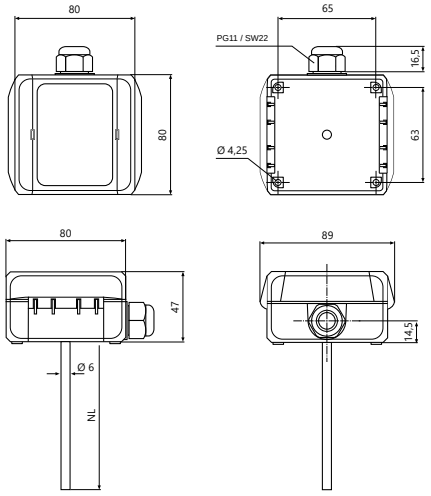

Dimensional Drawing 040

TF1/E, TF1/B-1W

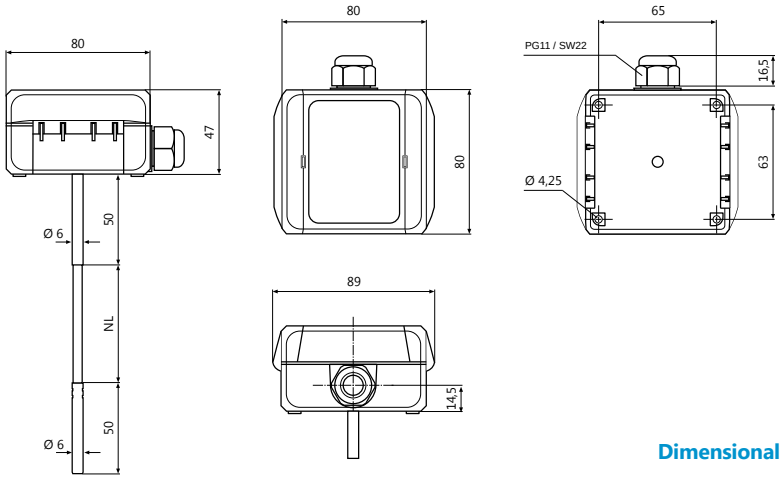

Dimensional Drawing 041

TF4/E

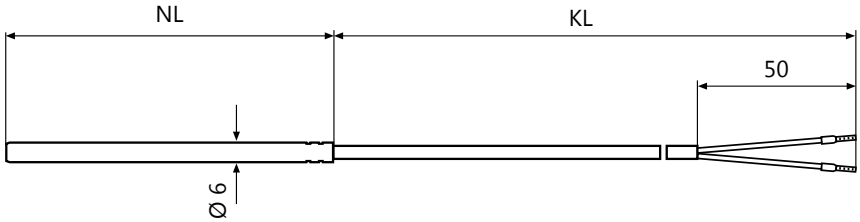

80mm

Dimensional Drawing 042

TF5/E

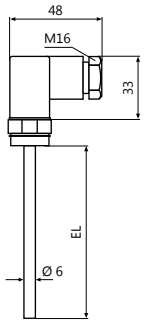

Dimensional Drawing 043

TF7/E

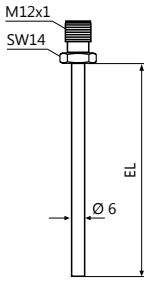

Dimensional Drawing 044

TF8/E

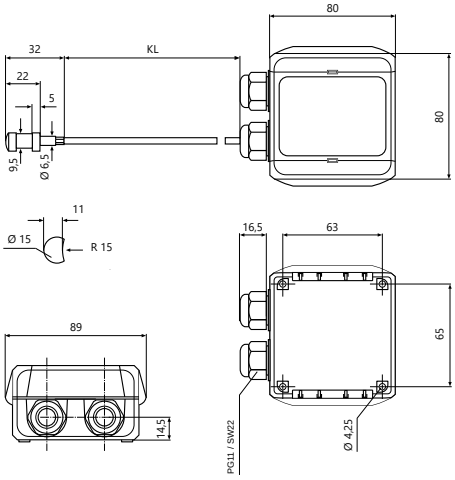

80mm

Dimensional Drawing 045

LM1/E

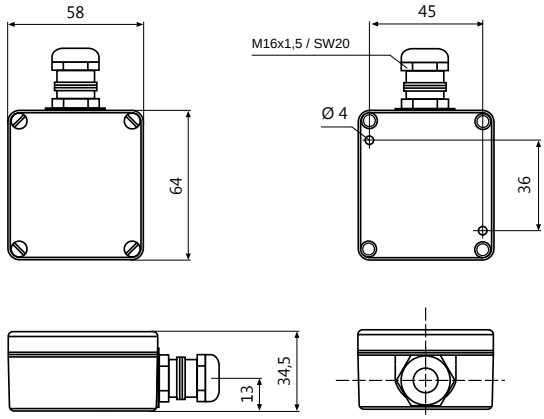

Dimensional Drawing 046

AM5/E

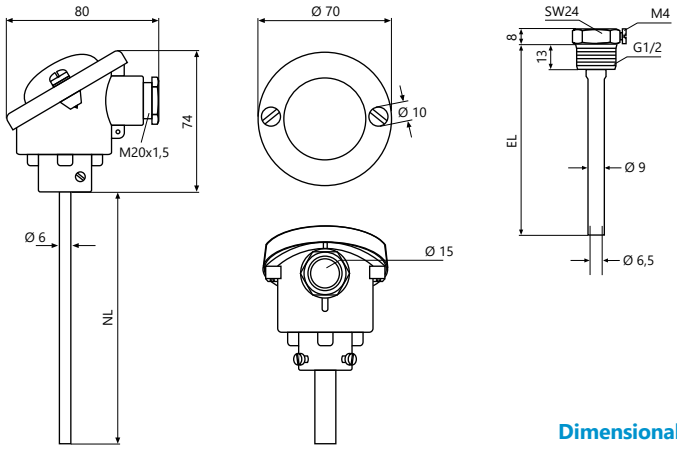

Dimensional Drawing 047

EM3/E

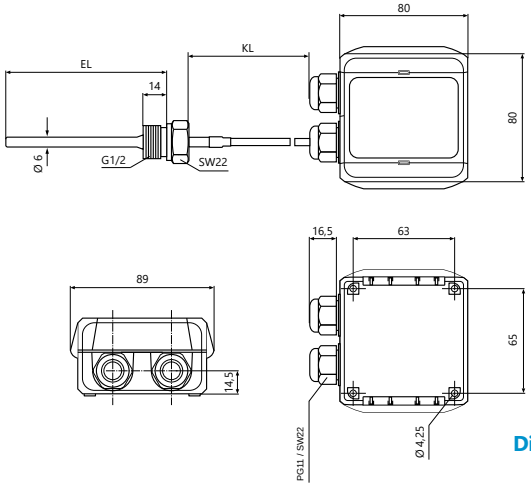

Dimensional Drawing 048

EM 5/E

80mm

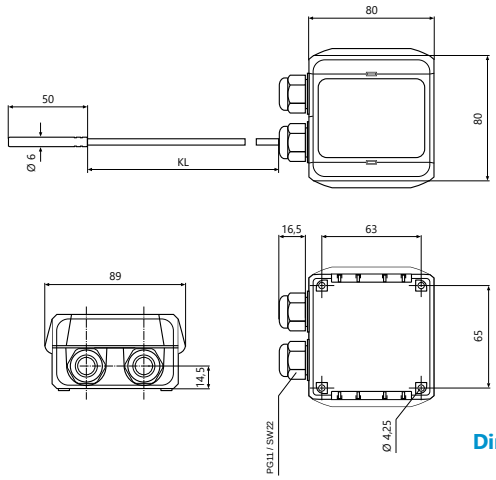

Dimensional Drawing 049

KSM/E, KTM/E

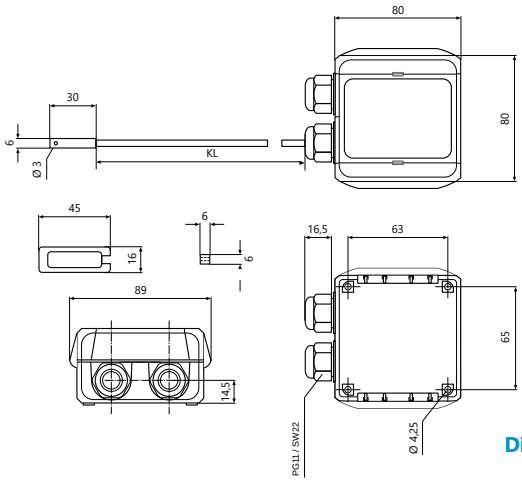

Dimensional Drawing 050

OM1/E

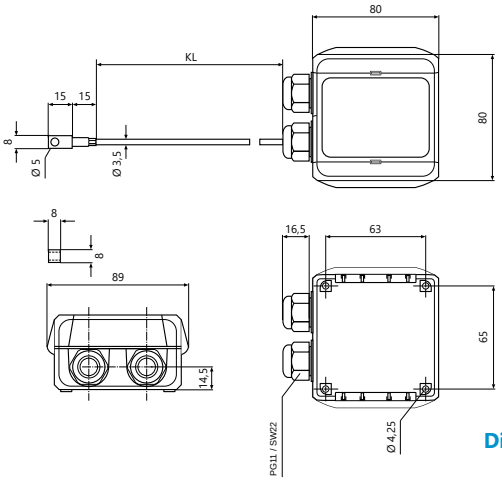

Dimensional Drawing 051

OM3/E

80mm

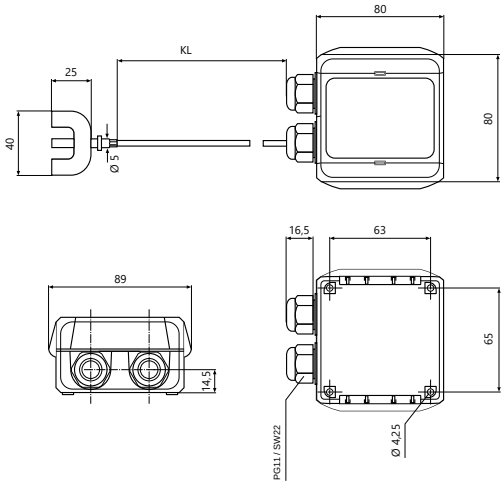

Dimensional Drawing 052

OM4/E

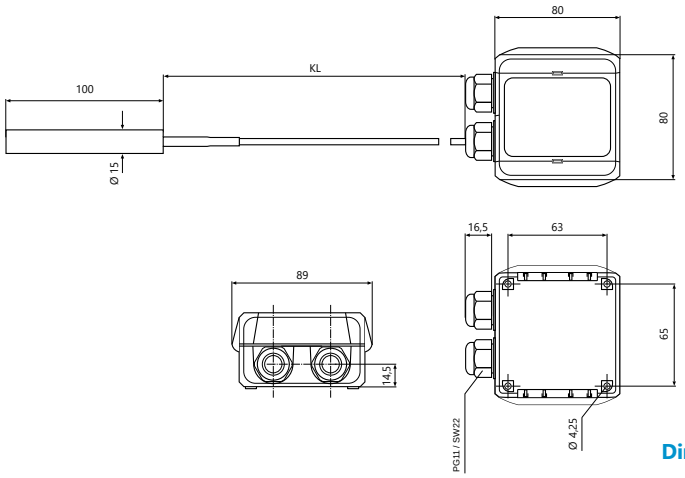

Dimensional Drawing 053

TPM2/E

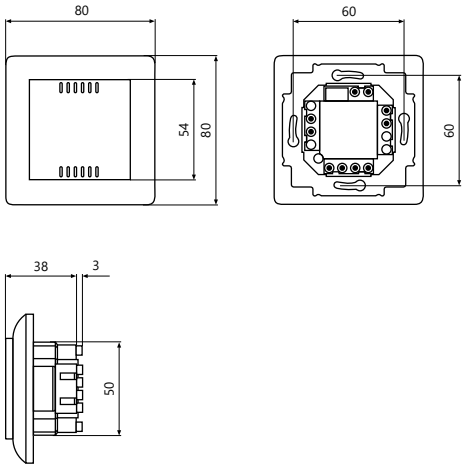

Dimensional Drawing 054

UM1/E, RLU/A, CO2-U/A

80mm

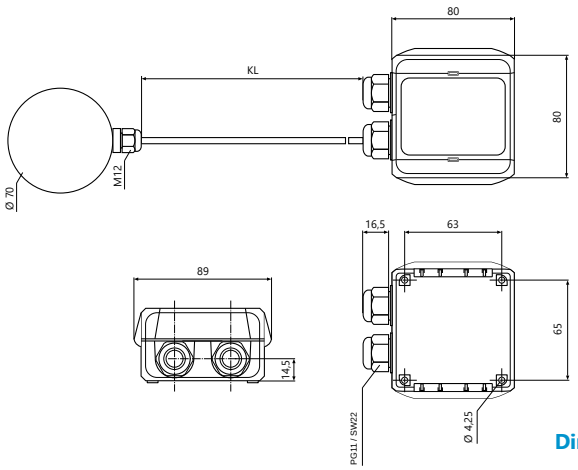

Dimensional Drawing 055

TPM1/E

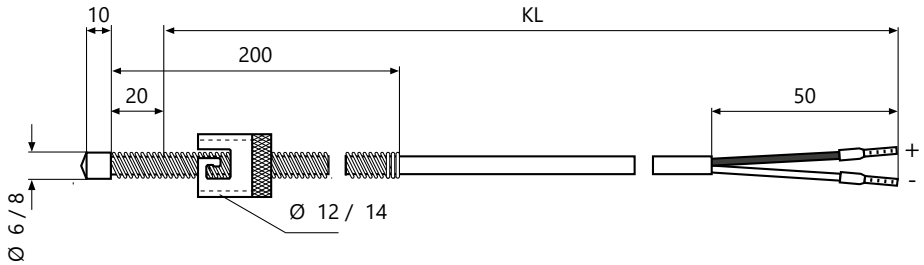

Dimensional Drawing 056

BF1/T

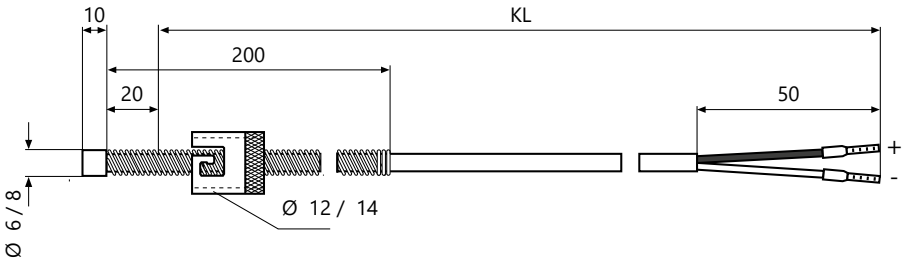

80mm

Dimensional Drawing 057

BF2/T

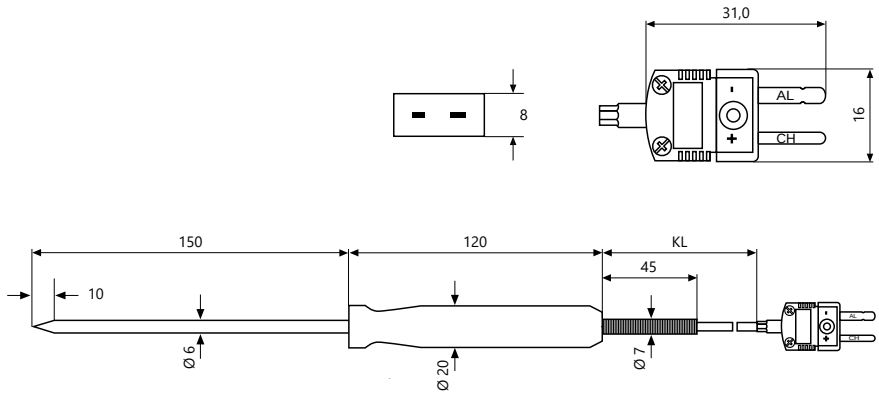

Dimensional Drawing 058

HE/T

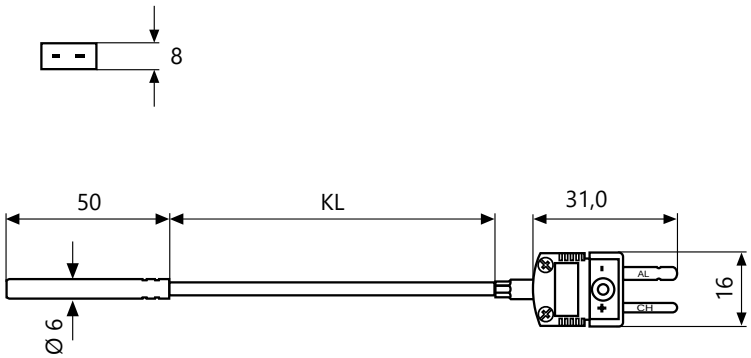

Dimensional Drawing 059

KS/T

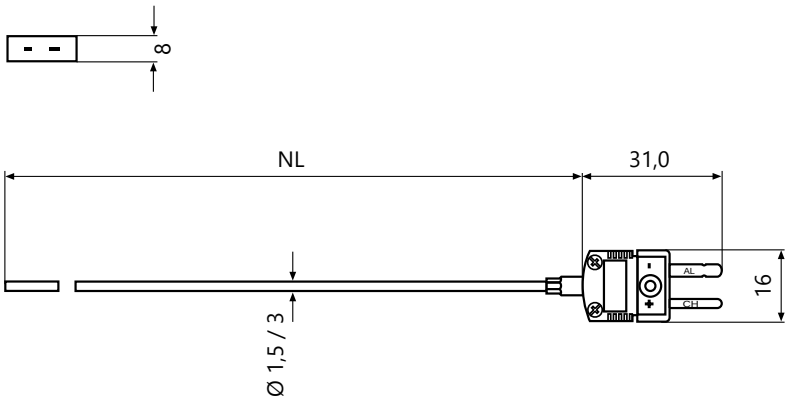

Dimensional Drawing 060

MT1/T

80mm

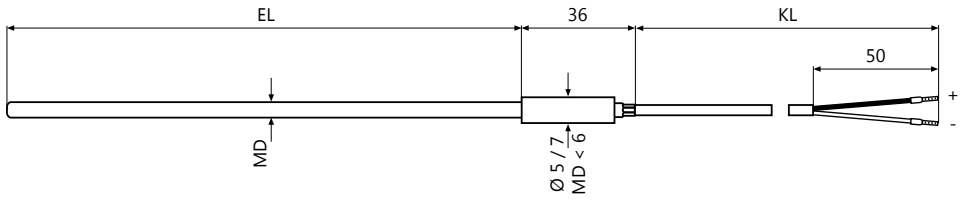

Dimensional Drawing 061

MJP/E, MJS/E, MJG/E, MKP/E, MKS/E, MKG/E, MLS/E

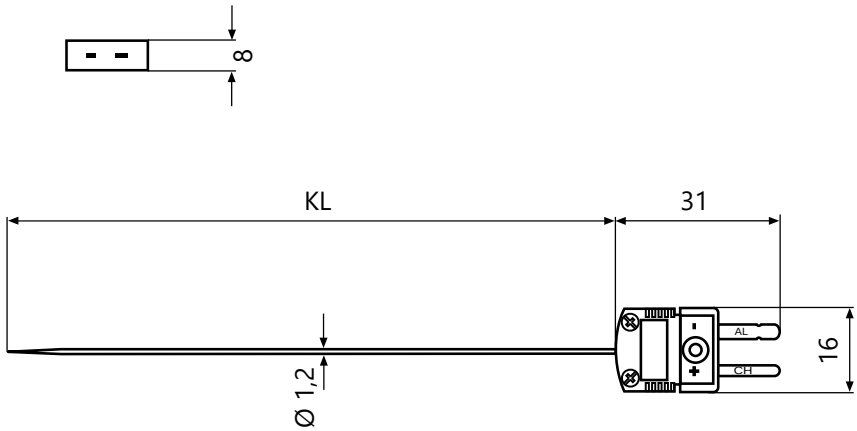

Dimensional Drawing 062

TPK/E

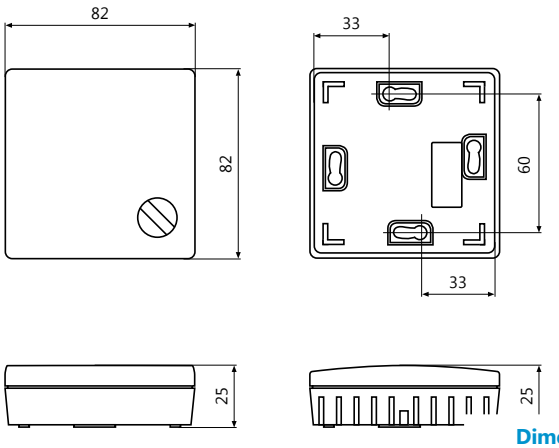

Dimensional Drawing 063

RF1/R

80mm

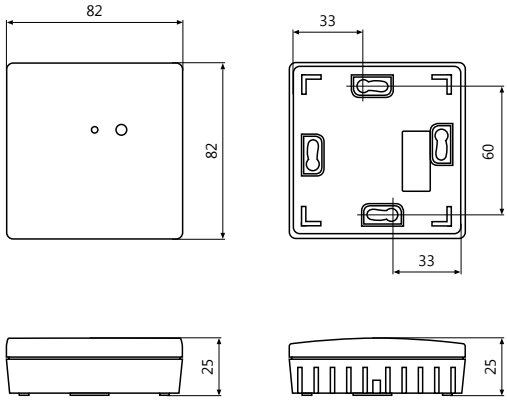

Dimensional Drawing 064

RF2/R

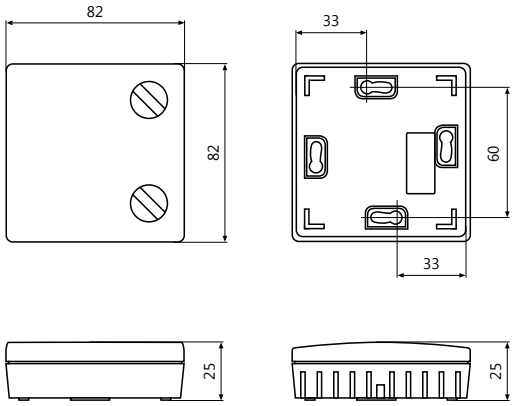

Dimensional Drawing 065

RF3/R

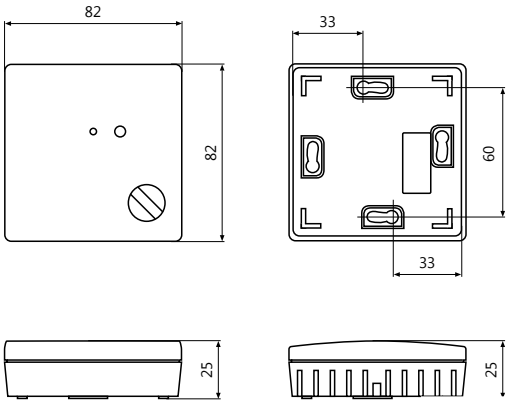

Dimensional Drawing 066

RF4/R

80mm

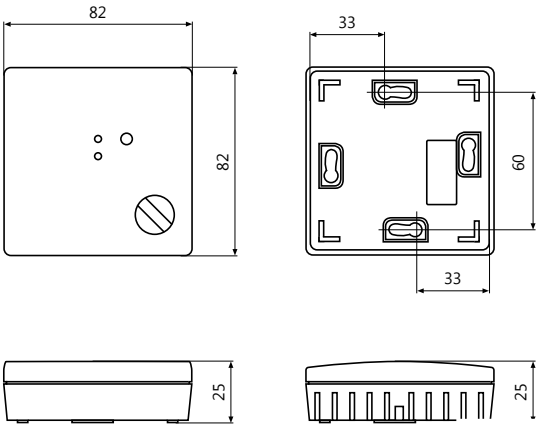

Dimensional Drawing 067

RF5/R

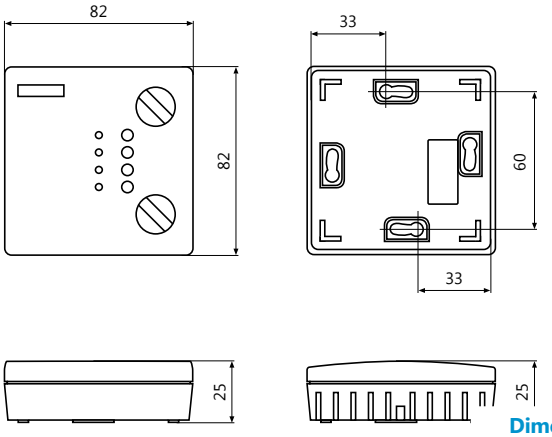

Dimensional Drawing 068

RF6/R

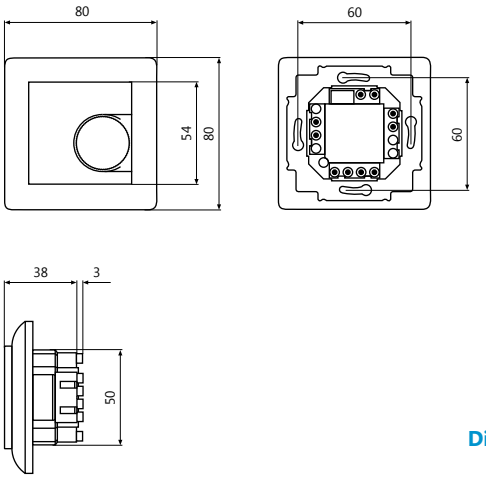

80mm

Dimensional Drawing 069

UP1/R

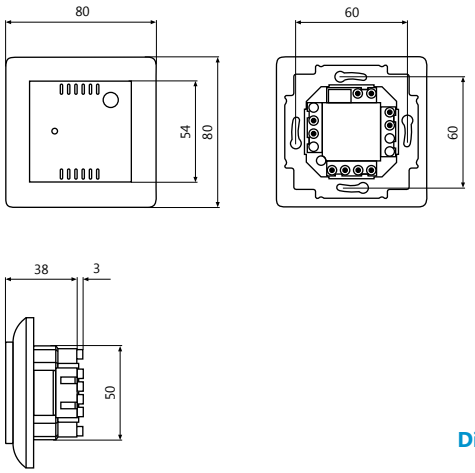

Dimensional Drawing 070

UP2/R

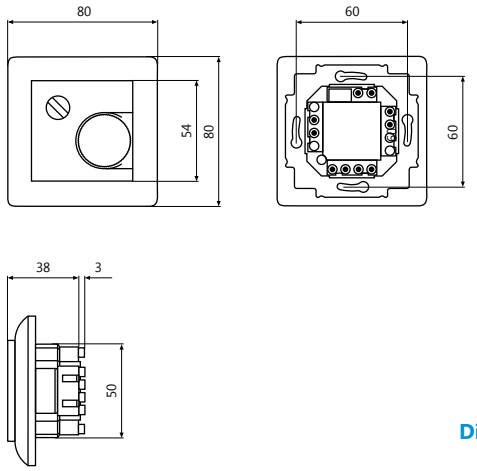

Dimensional Drawing 071

UP3/R

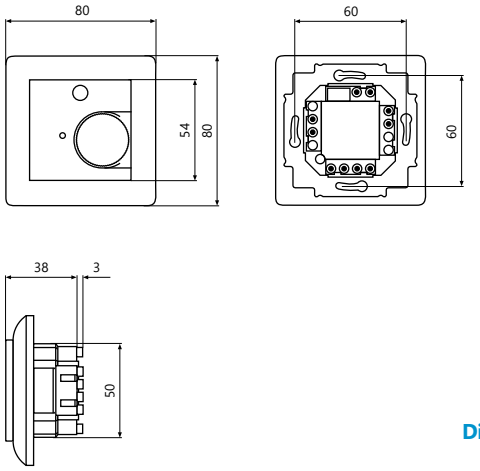

Dimensional Drawing 072

UP4/R

80mm

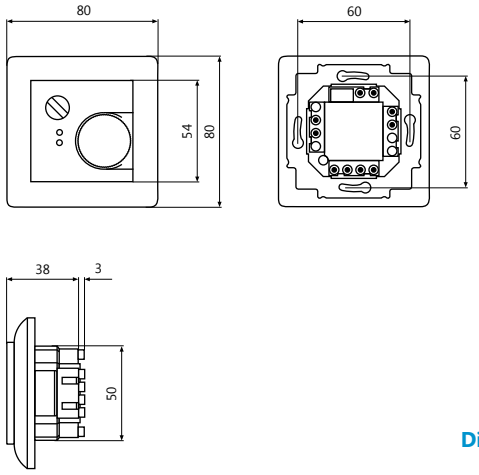

Dimensional Drawing 073

UP5/R

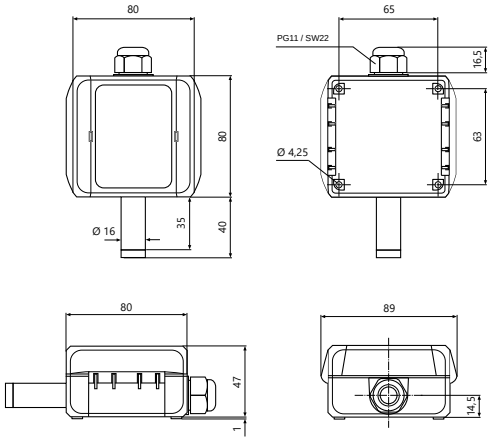

Dimensional Drawing 074

RAF/A. RAFT/A. RAFTP/A. RAF/M

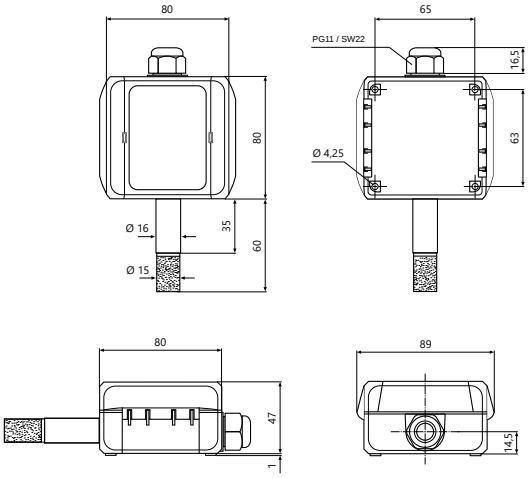

80mm

Dimensional Drawing 075

RAF(H)/A, RAFT(H)/A

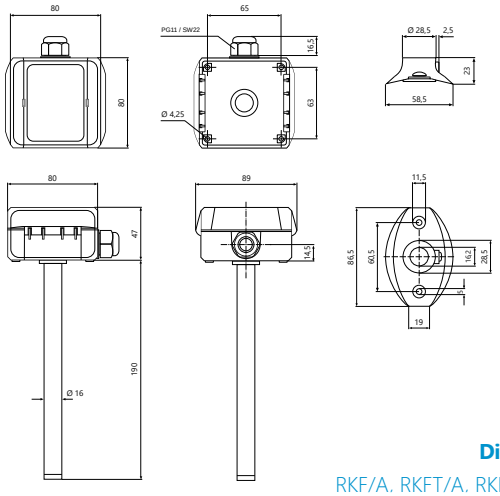

Dimensional Drawing 076

RKF/A, RKFT/A, RKFTP/A, RKF/M, KL/A, KLT/A

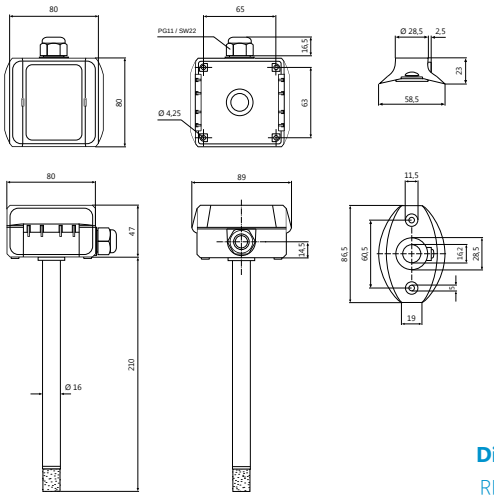

Dimensional Drawing 077

RKF(H)/A, FS3130, RKFT(H)/A

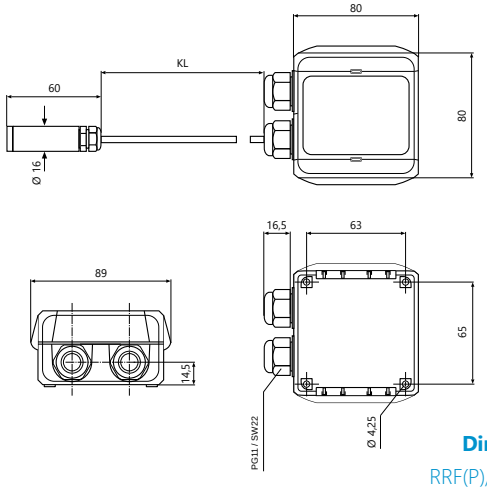

Dimensional Drawing 078

RRF(P)/A, RRFT(P)/A, RRFTP(P)/A

80mm

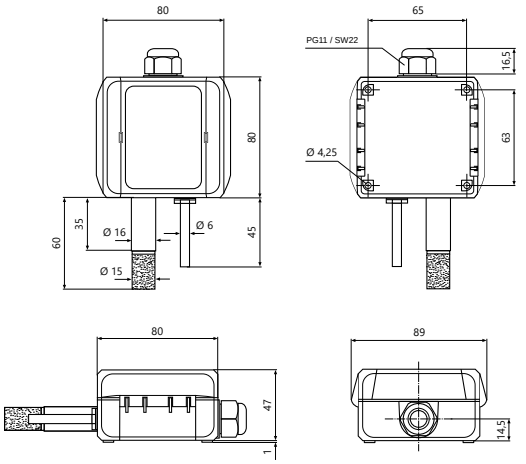

Dimensional Drawing 079

FS3135

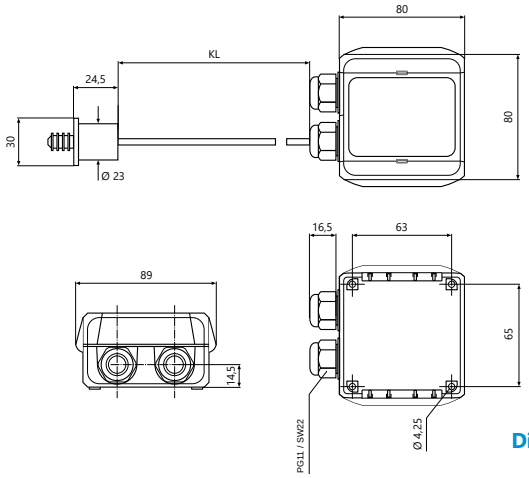

Dimensional Drawing 080

RDF/A. RDFT/A

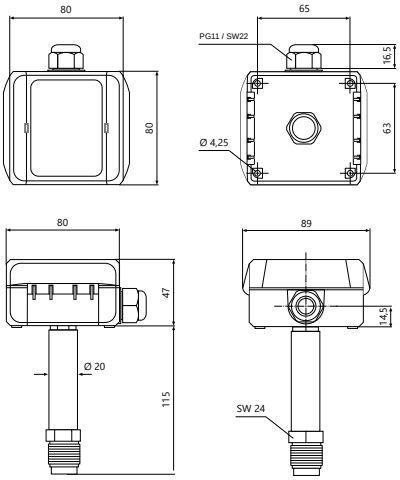

Dimensional Drawing 081

FS3110

80mm

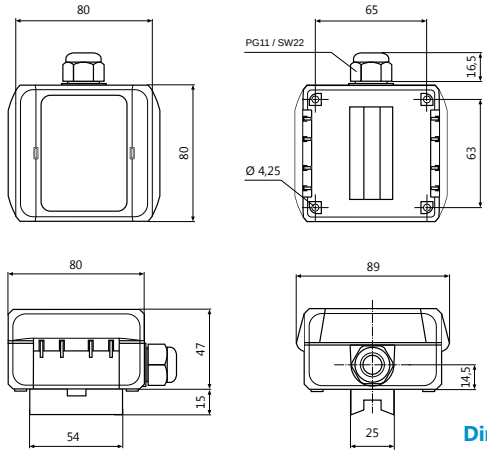

Dimensional Drawing 082

TW/A

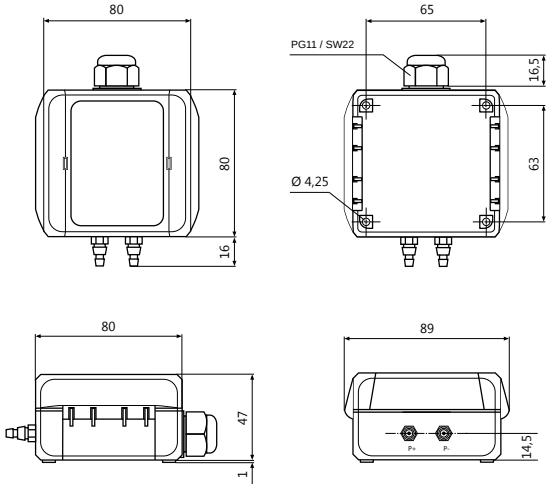

Dimensional Drawing 083

DMU/A. VMU1/A

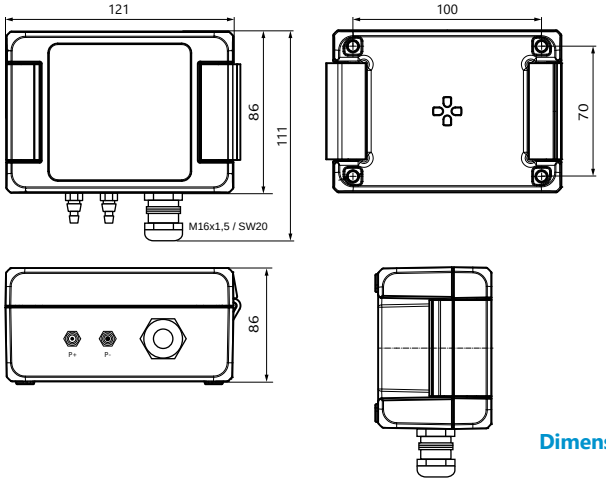

80mm

Dimensional Drawing 084

DMU2/A

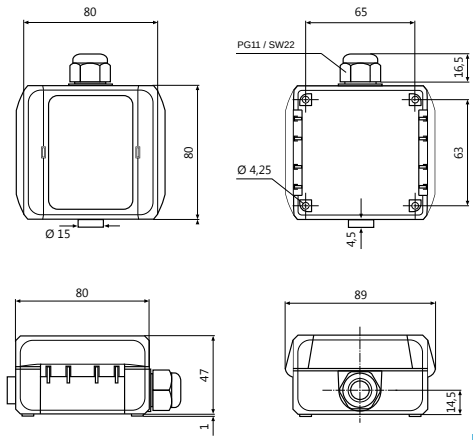

Dimensional Drawing 085

AD/A, CO2-A/A, CO2VOC-A/A, CO-A/A

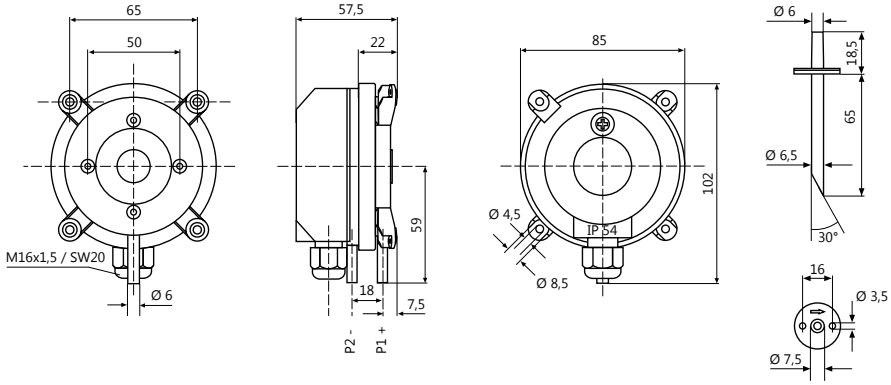

Dimensional Drawing 086

DW/H

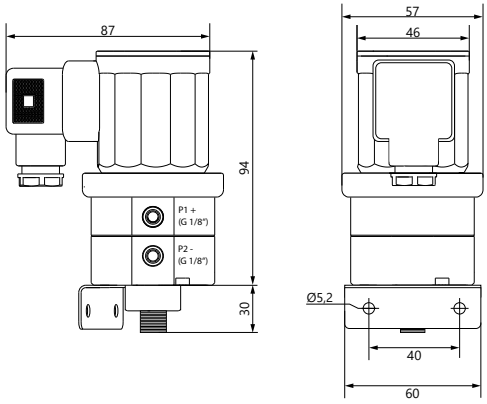

Dimensional Drawing 087

FS3610

80mm

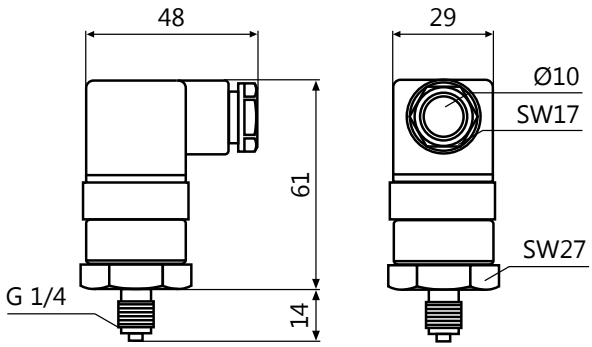

Dimensional Drawing 088

DT/D, ADF/A

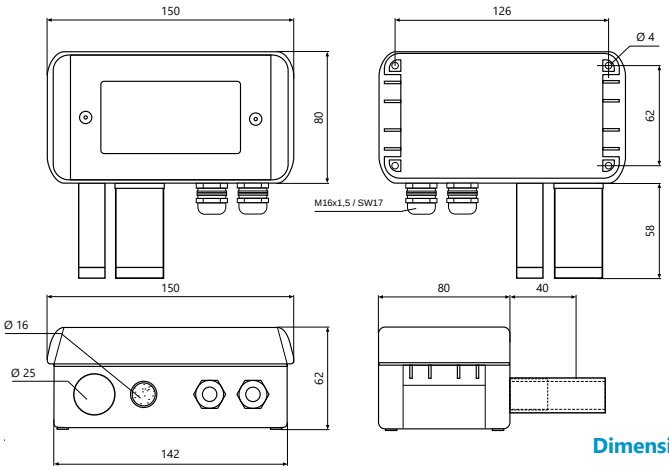

Dimensional Drawing 089

CO2-M/A, CO-M/A

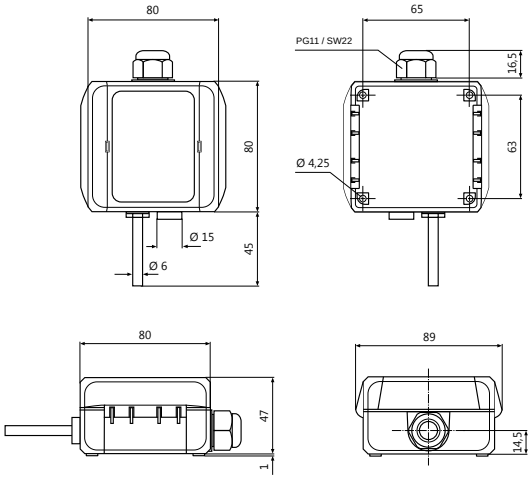

80mm

Dimensional Drawing 090

CO2T-A/A, COT-A/A

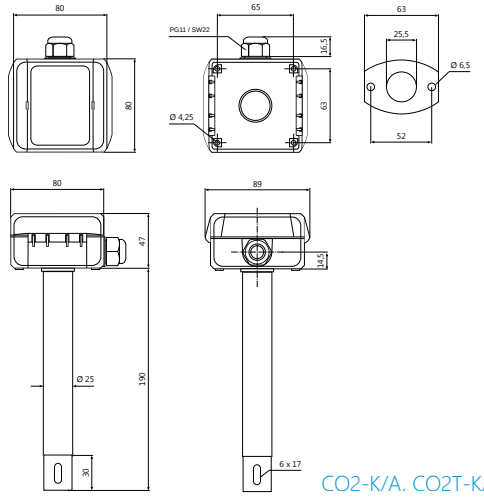

Dimensional Drawing 091

CO2-K/A, CO2T-K/A, CO2VOC-K/A, CO-K/A, COT-K/A

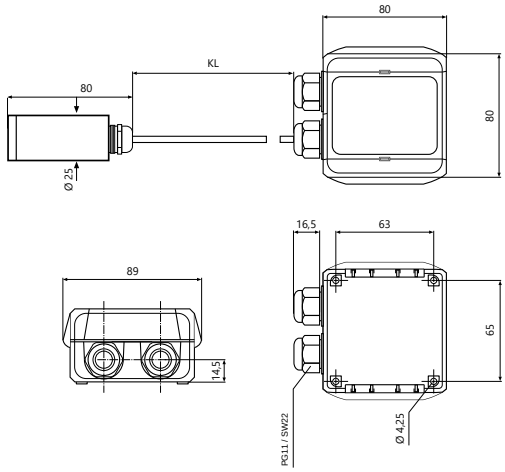

Dimensional Drawing 092

CO2-P/A

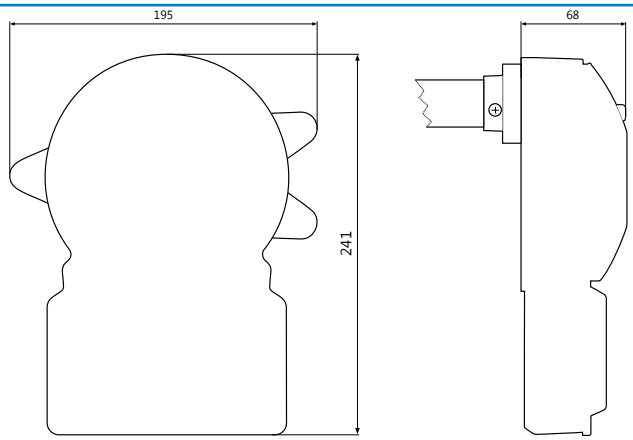

Dimensional Drawing 093

UG-5

80mm

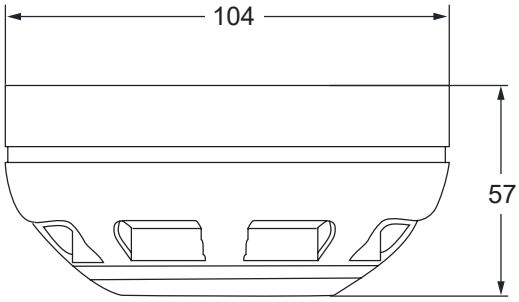

Dimensional Drawing 094

ST-P-OM

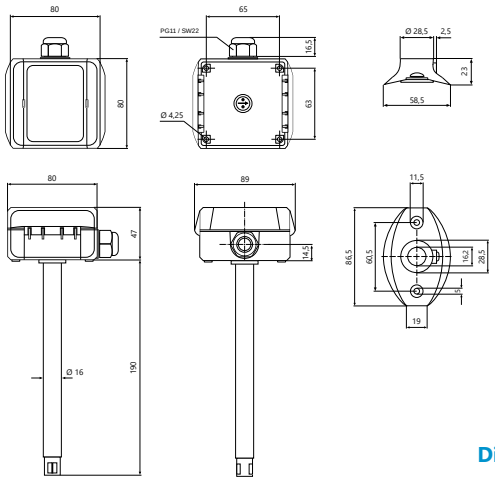

Dimensional Drawing 095

FS5020, FS5021

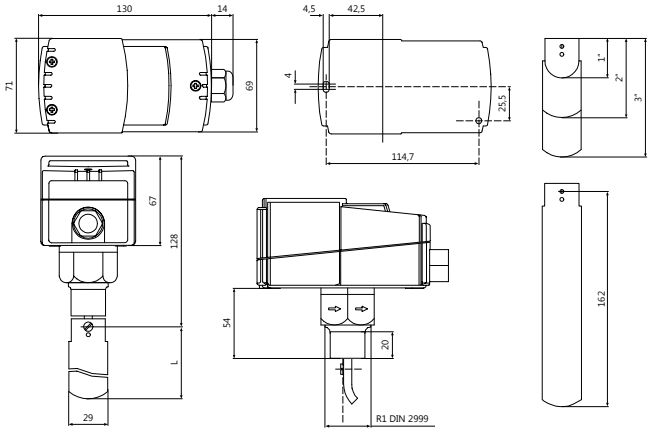

Dimensional Drawing 096

SRW/N

80mm

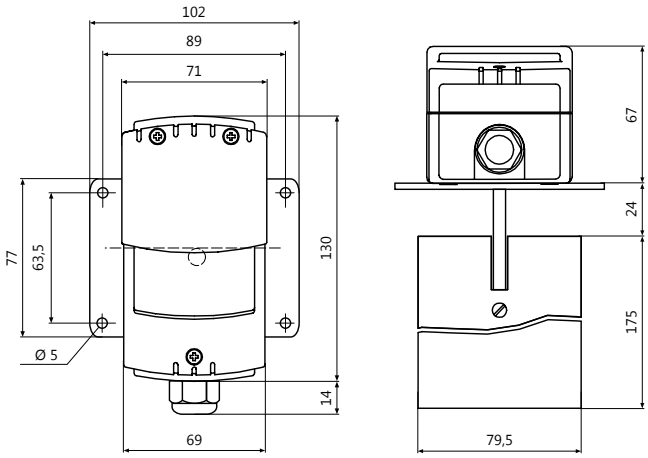

Dimensional Drawing 097

WFR/N

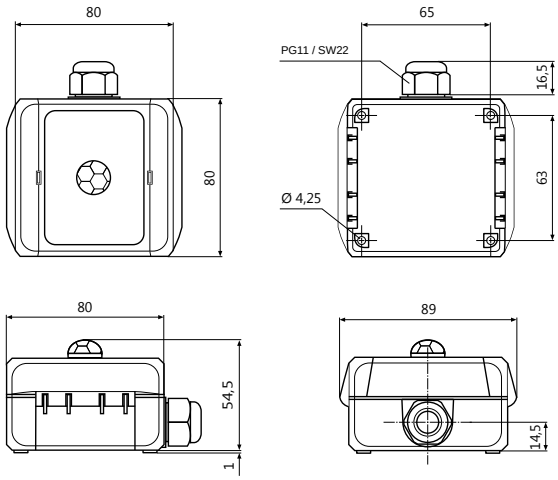

Dimensional Drawing 098

BFA/A

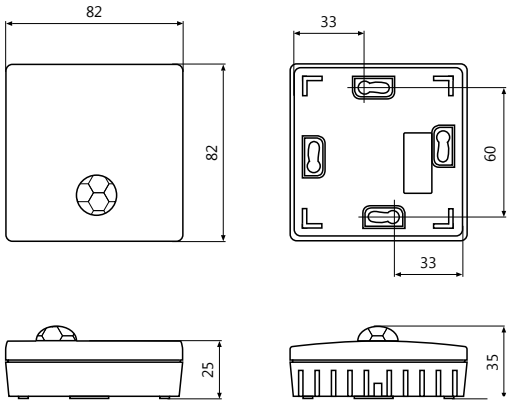

Dimensional Drawing 099

BFR/A

80mm

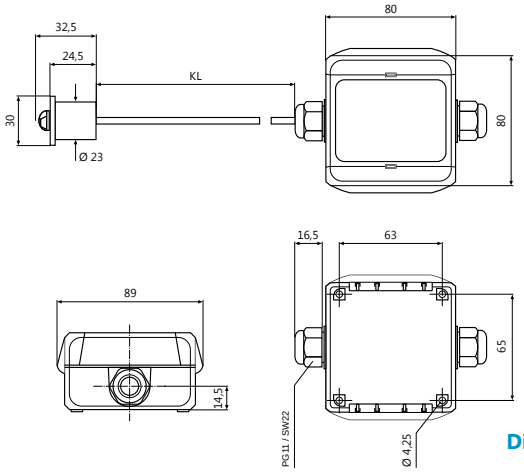

Dimensional Drawing 100

BFD/A

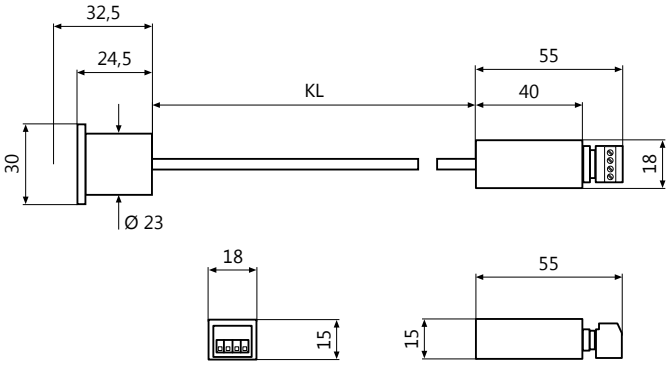

Dimensional Drawing 101

BFD2/A

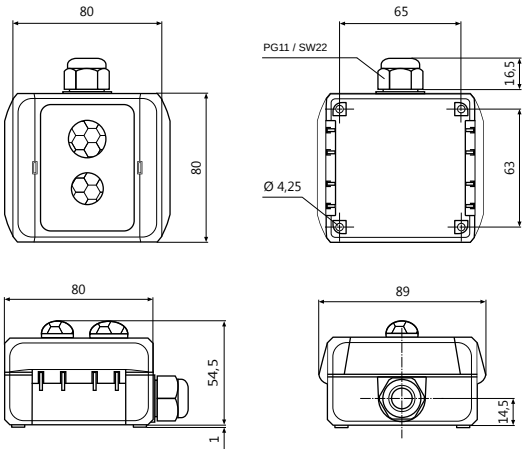

Dimensional Drawing 102

BHA/A

80mm

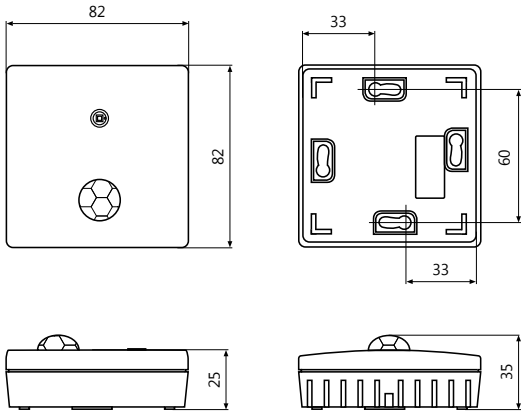

Dimensional Drawing 103

BHR/A, FS1580

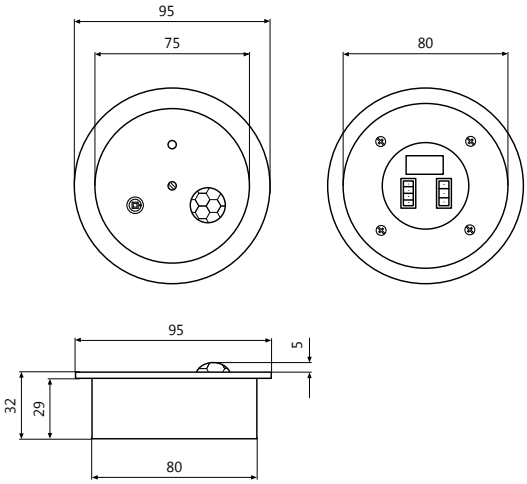

Dimensional Drawing 104

BHT-D/A

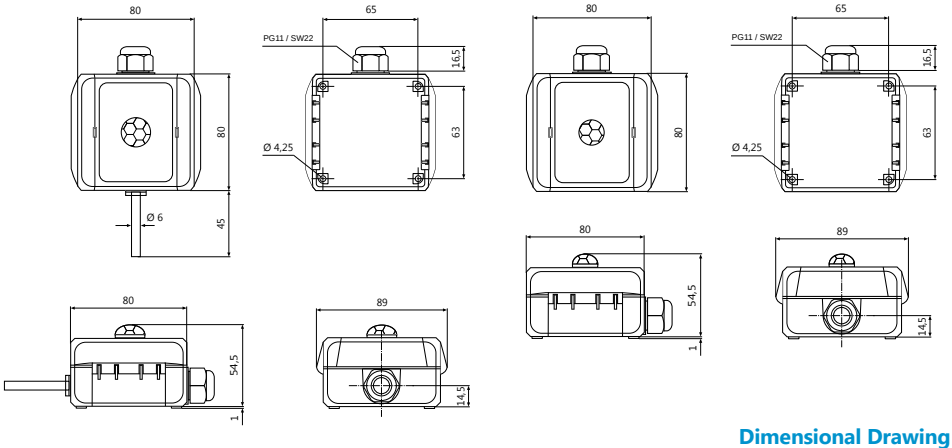

80mm

Dimensional Drawing 105

HFA/A

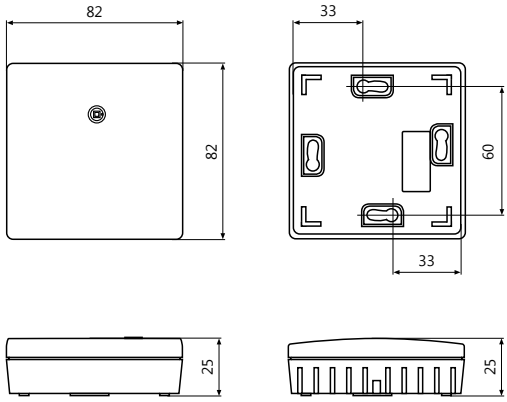

Dimensional Drawing 106

HFR/A

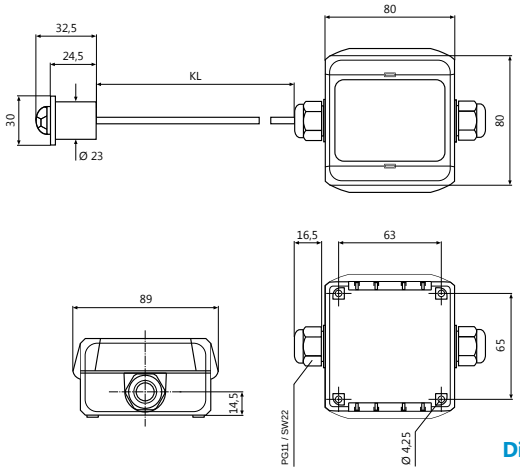

Dimensional Drawing 107

HFD/A

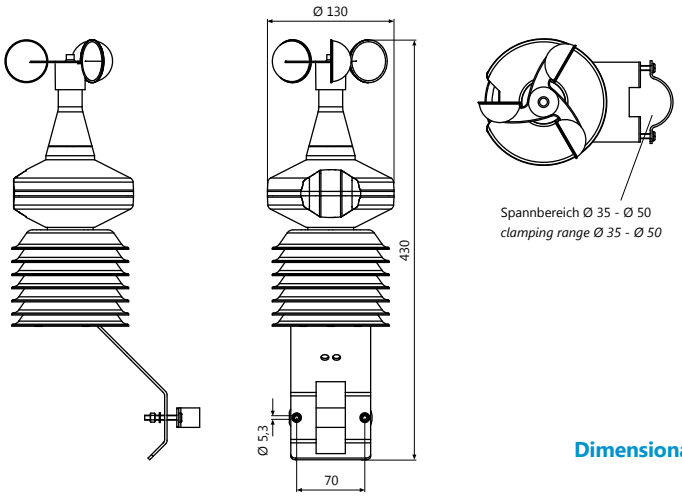

80mm

Dimensional Drawing 108

FS6001

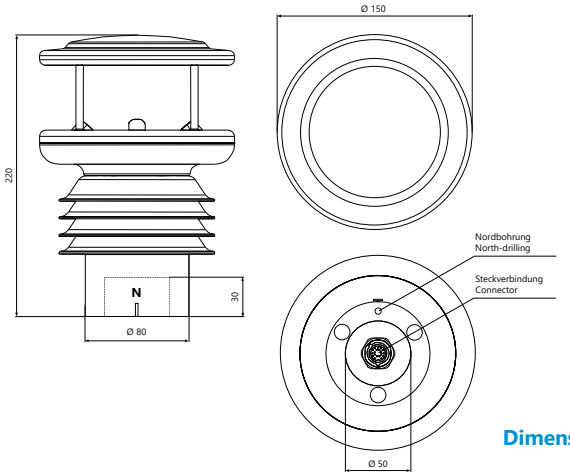

Dimensional Drawing 109

FS6002

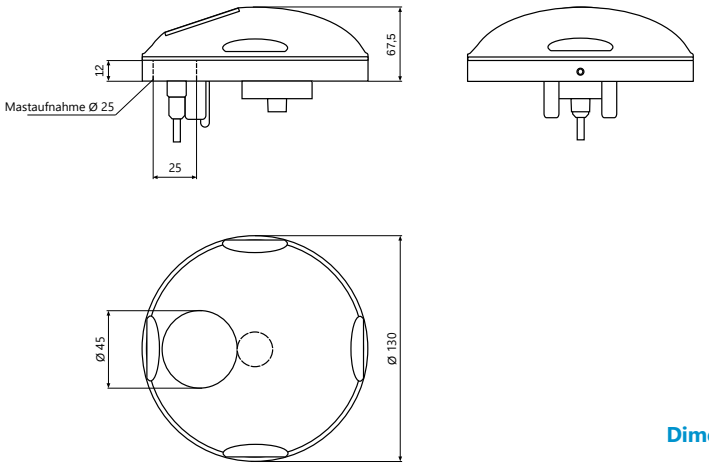

Dimensional Drawing 110

FS6003

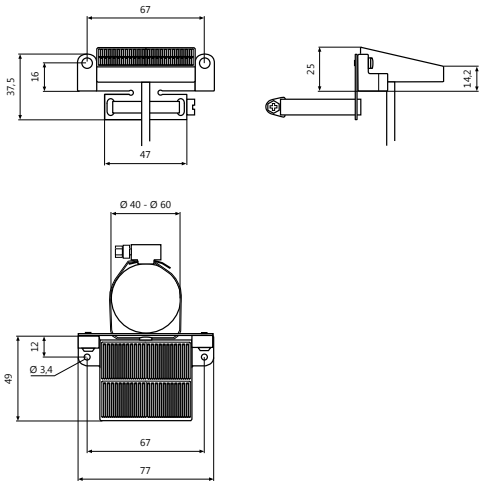

Dimensional Drawing 111

NW/O

80mm

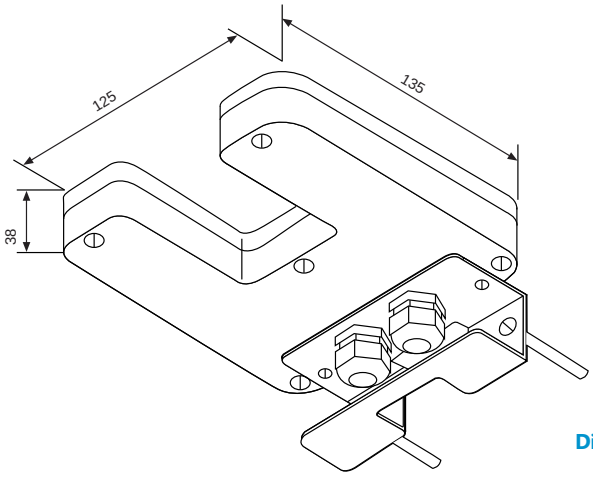

Dimensional Drawing 112

NW1/O

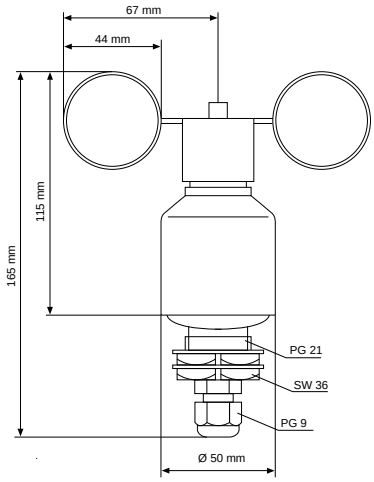

Dimensional Drawing 113

WG2/O

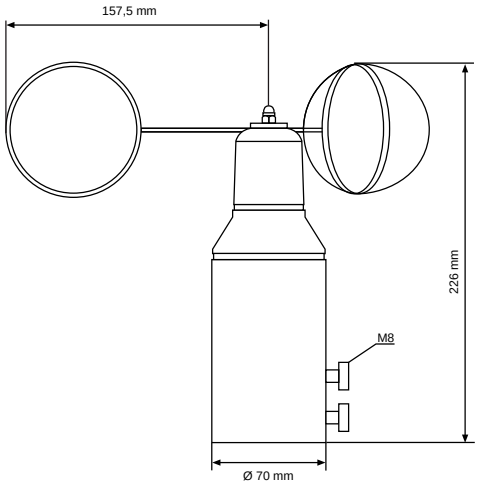

Dimensional Drawing 114

WG/O

80mm

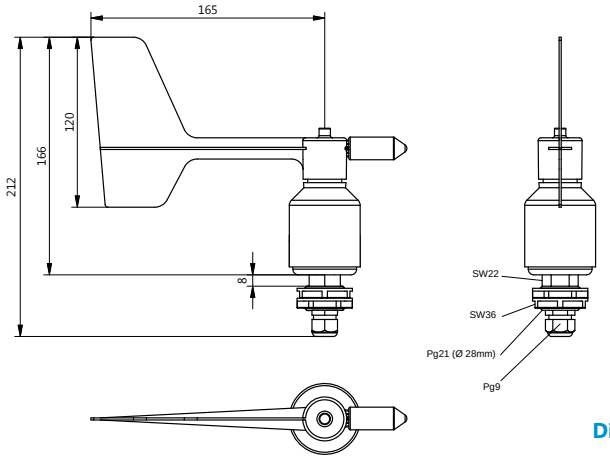

Dimensional Drawing 115

WRG2/O

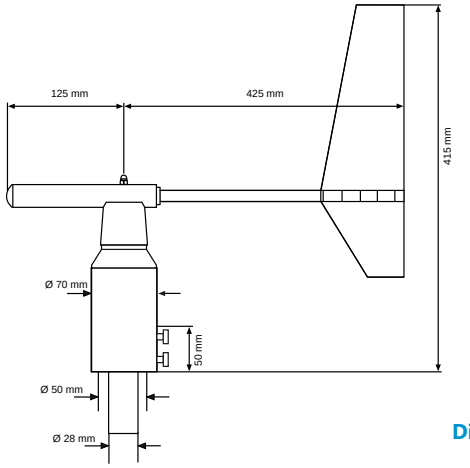

Dimensional Drawing 116

WRG/O

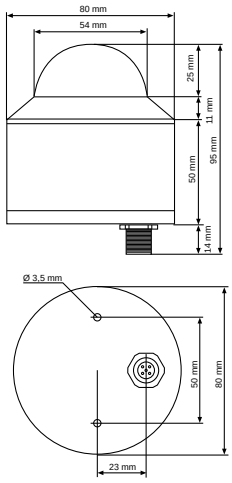

80mm

Dimensional Drawing 117

GSM/O

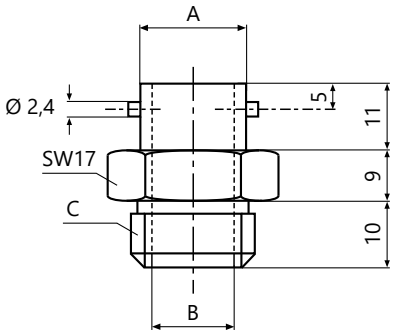

A	B	C
12/14	6,5	M10
12/14	6,5	M10x1
12/14	8,5	M12
12/14	8,5	M12x1
12/14	8,5	M14x1,5
12/14	8,5	G1/4"
12/14	8,5	G3/8"

Dimensional Drawing 118

BN/E

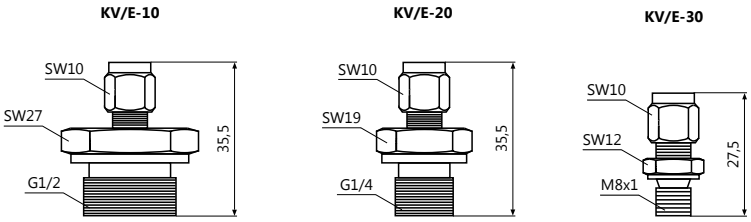

Dimensional Drawing 119

KV/E

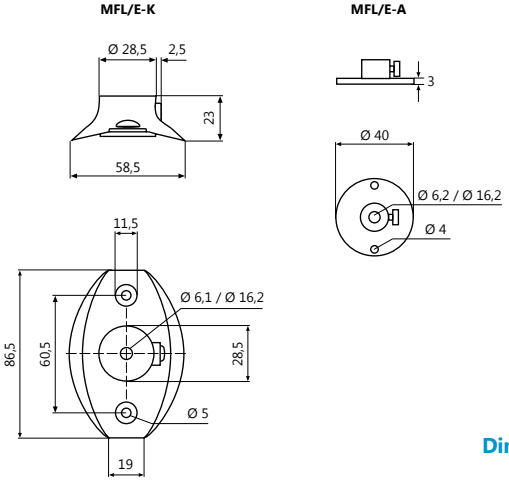

Dimensional Drawing 120

MFL/E

80mm

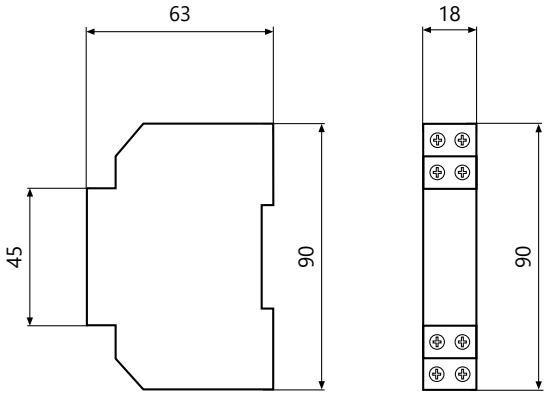

Dimensional Drawing 121

MUH/E

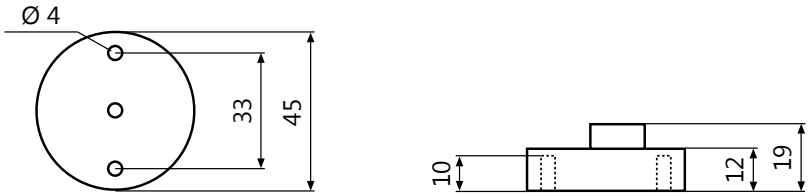

Dimensional Drawing 122

MUB/E

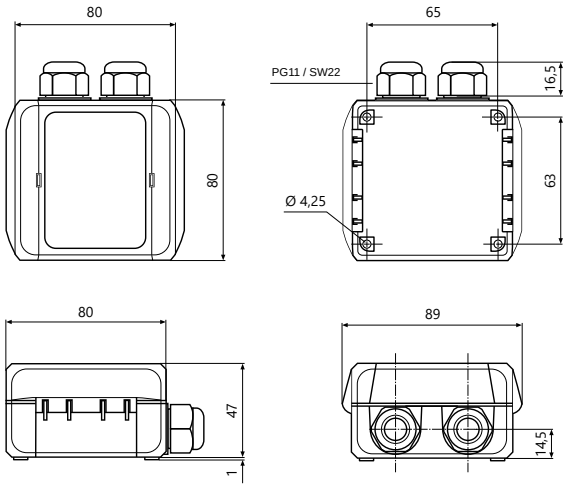

80mm

Dimensional Drawing 123

MUD/E, FS1001

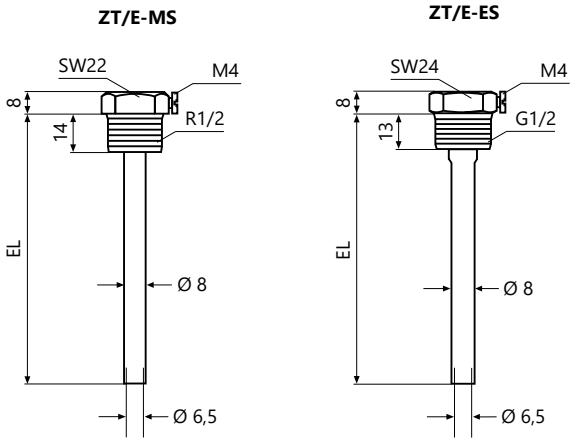

Dimensional Drawing 124

ZT/E

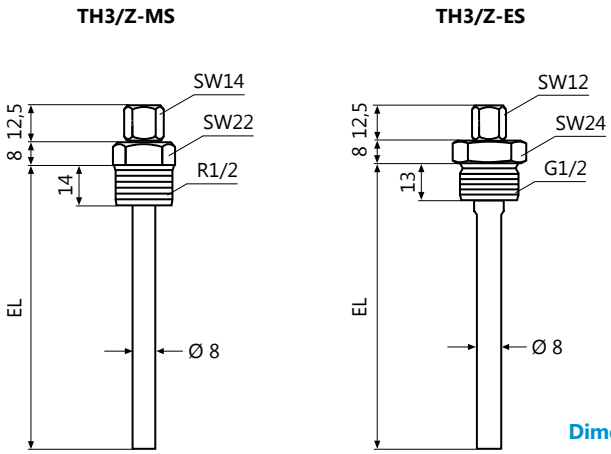

Dimensional Drawing 125

TH3/Z

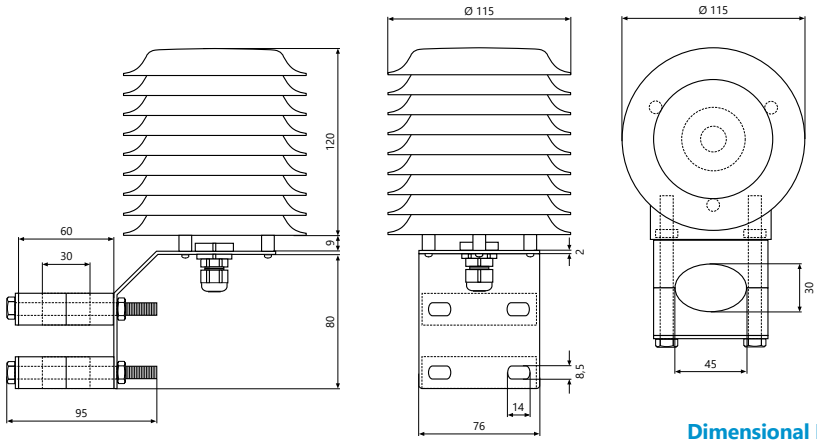

80mm

Dimensional Drawing 126

SWS/A

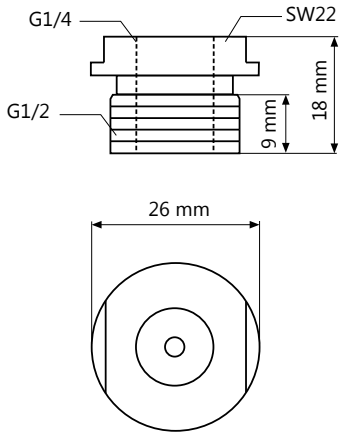

Dimensional Drawing 127
DTA/D

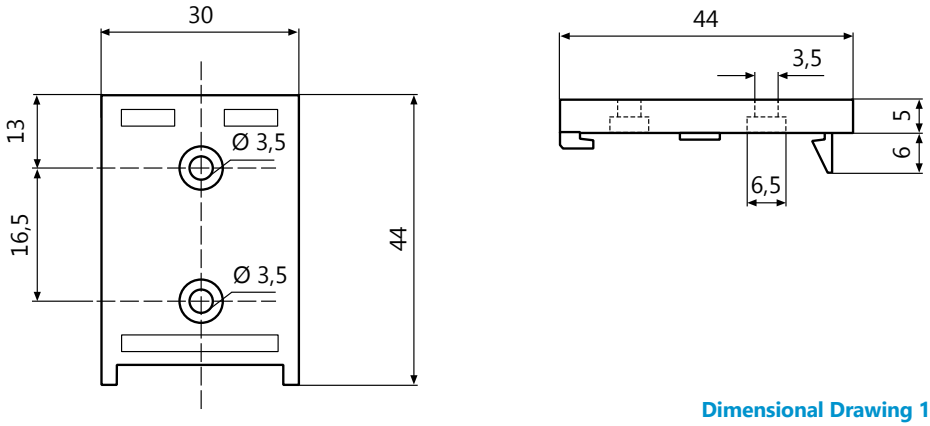

Dimensional Drawing 128
SB/E

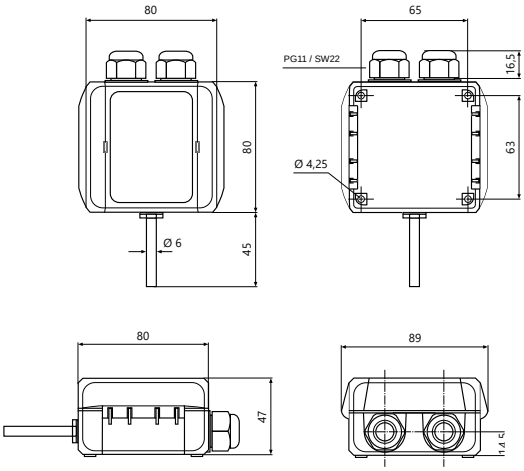

Dimensional Drawing 129
FS1002

80mm

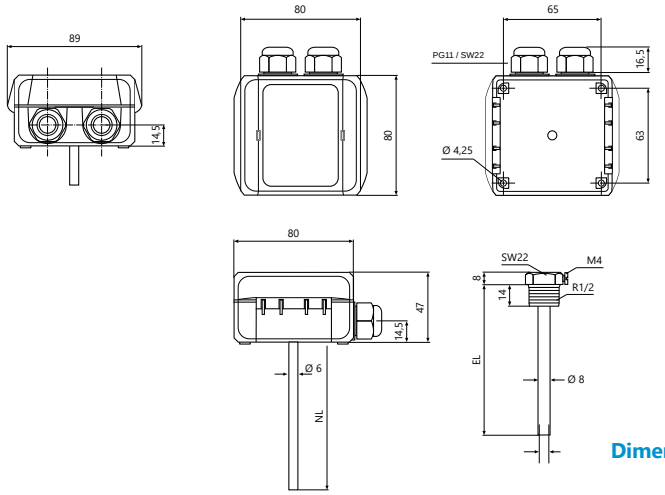

Dimensional Drawing 130

FS1022

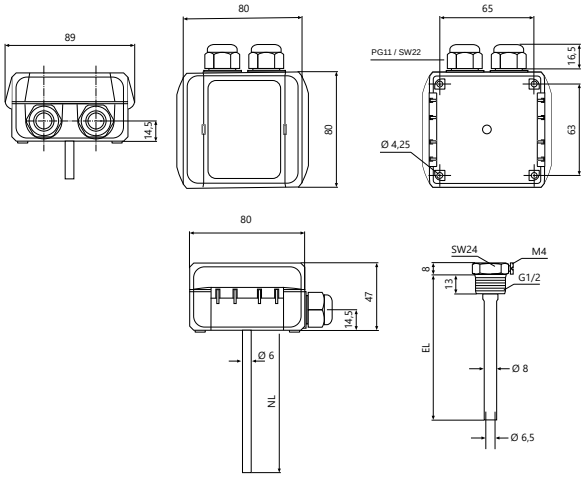

Dimensional Drawing 131

FS1023

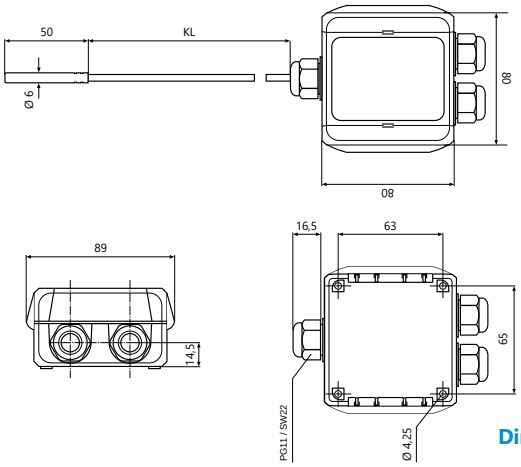

Dimensional Drawing 132

FS1040, FS1041

80mm

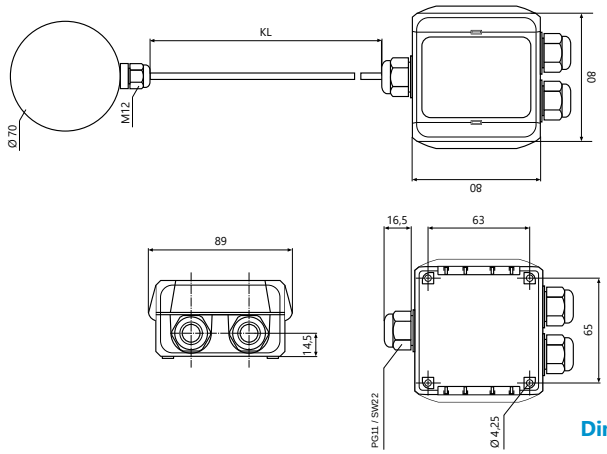

Dimensional Drawing 133

FS1042

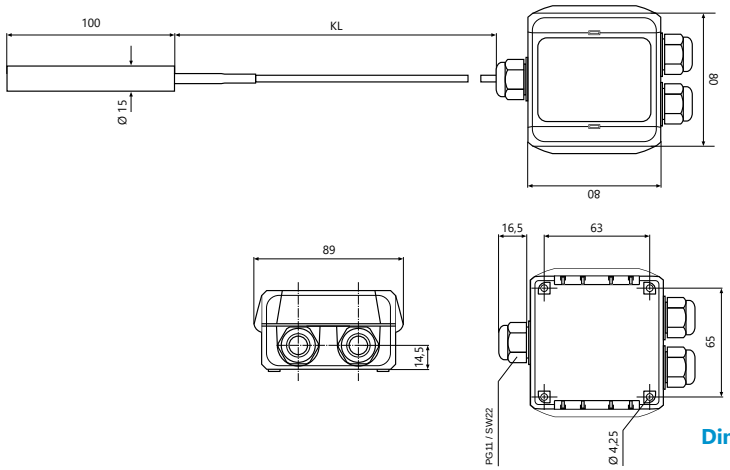

Dimensional Drawing 134

FS1043

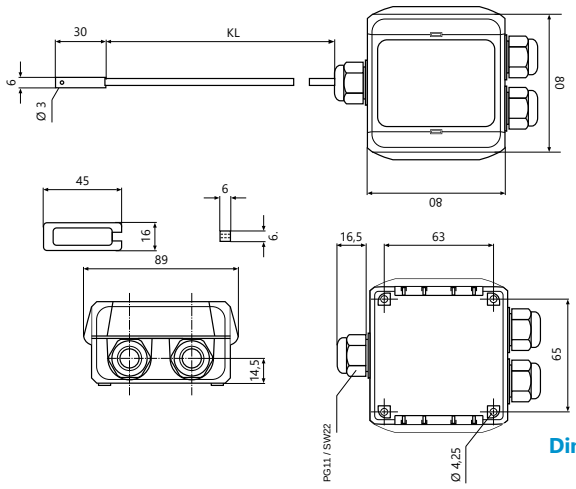

Dimensional Drawing 135

FS1050

80mm

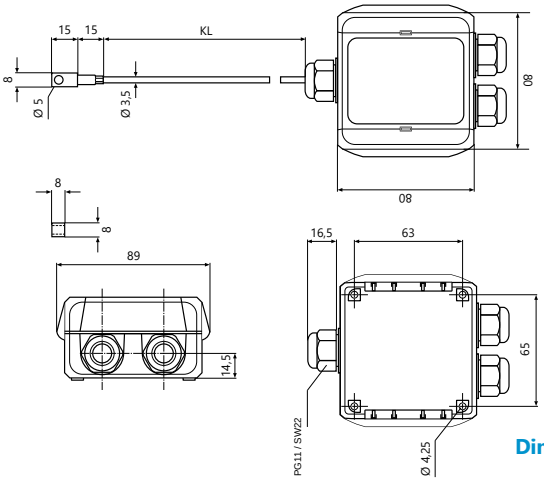

Dimensional Drawing 136

FS1051

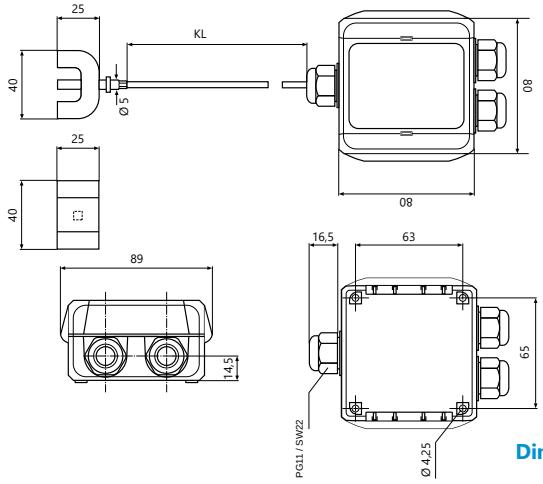

Dimensional Drawing 137

FS1052

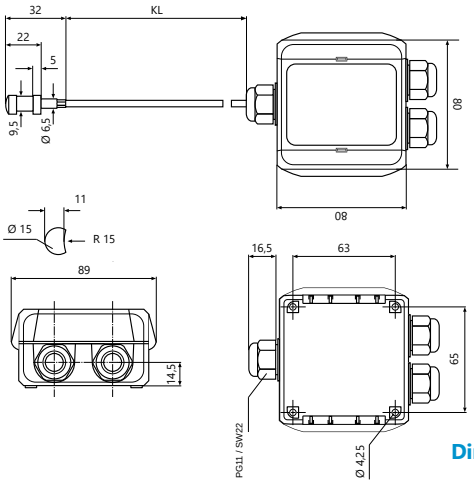

Dimensional Drawing 138

FS1053

80mm

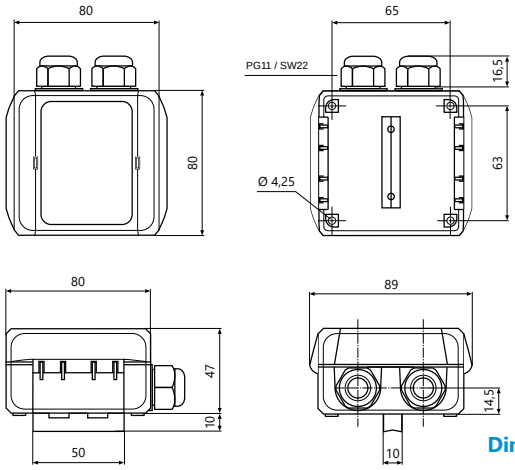

Dimensional Drawing 139

FS1060

Dimensional Drawing 140

KS/B-1W

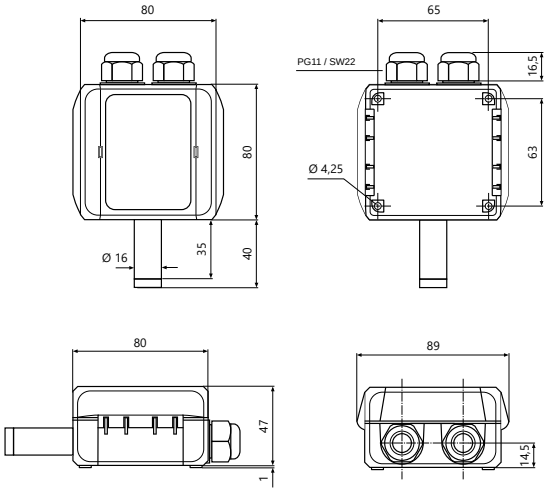

80mm

Dimensional Drawing 141

FS1100, FS1101

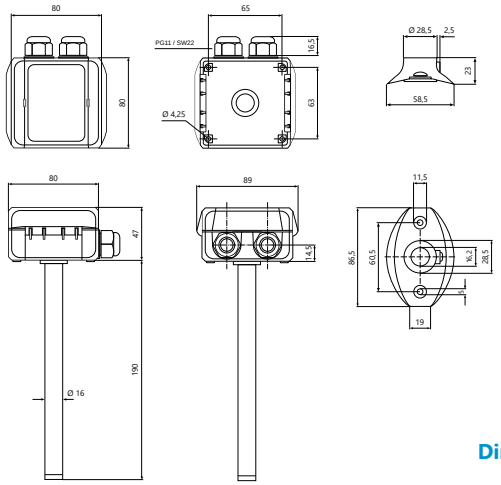

Dimensional Drawing 142

FS1120, FS1121

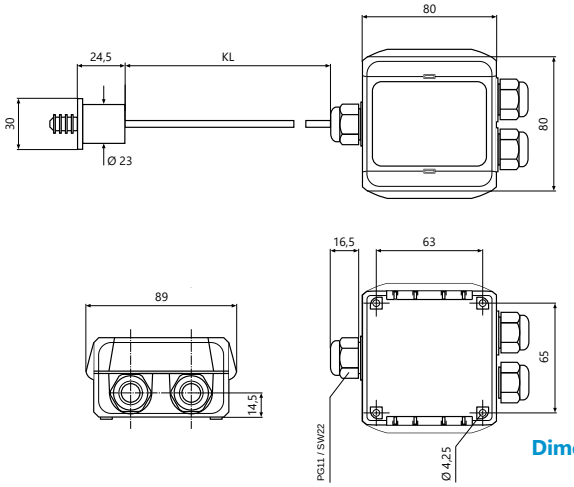

Dimensional Drawing 143

FS1140

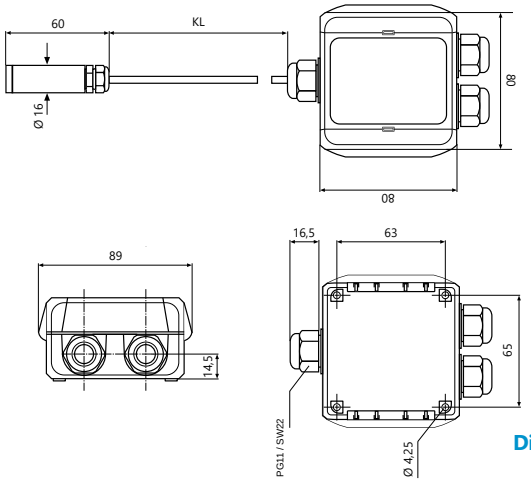

Dimensional Drawing 144

FS1141

80mm

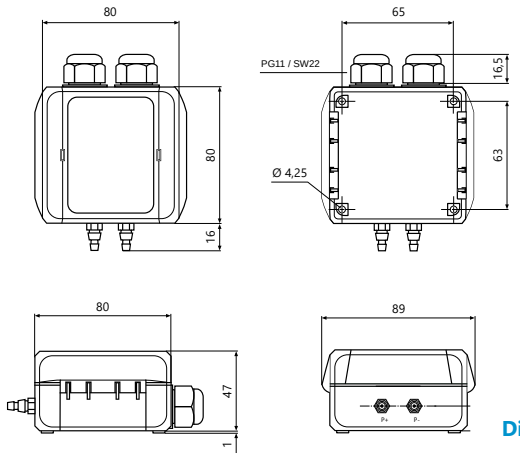

Dimensional Drawing 145

FS1200

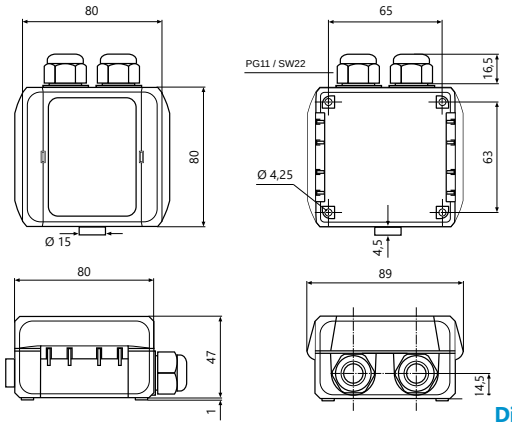

Dimensional Drawing 146

FS1205

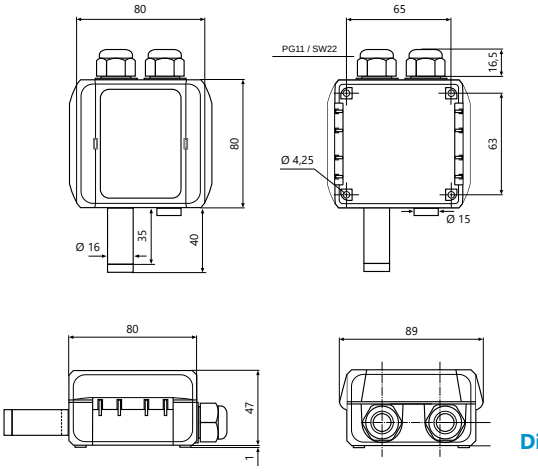

Dimensional Drawing 147

FS1300, FS1301

80mm

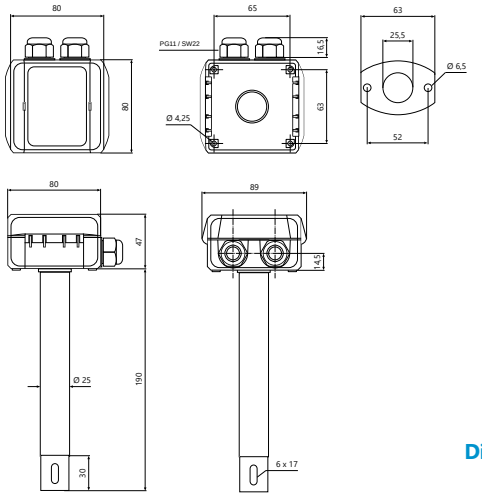

Dimensional Drawing 148

FS1320, FS1321

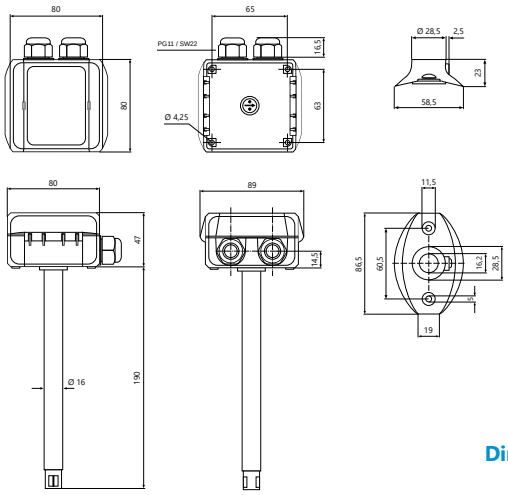

Dimensional Drawing 149

FS1420, FS1421

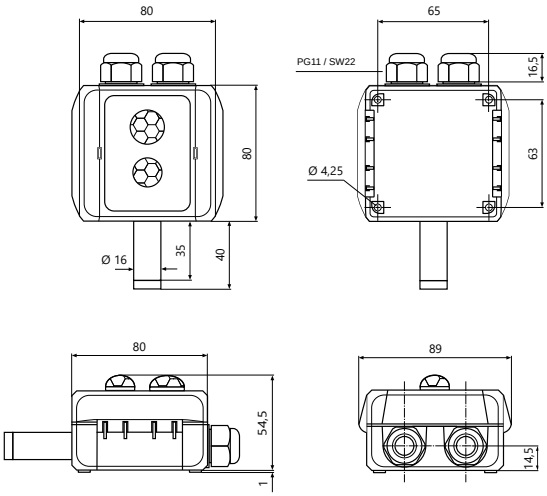

80mm

Dimensional Drawing 150

FS1500

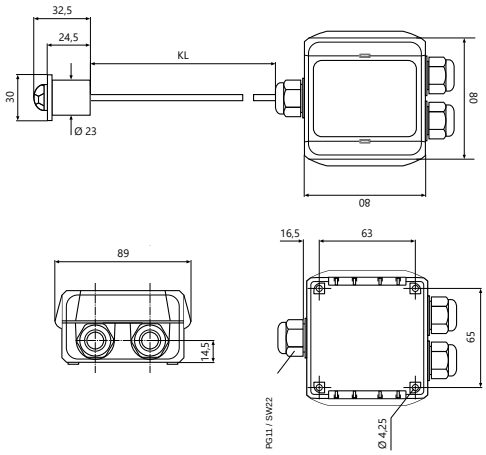

Dimensional Drawing 151

FS1540

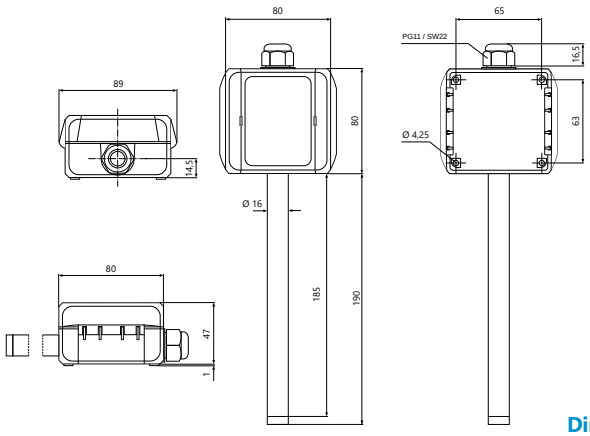

Dimensional Drawing 152

FS3101

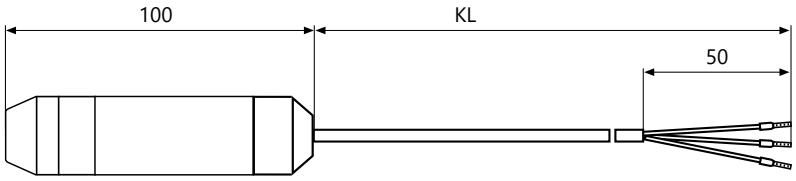

80mm

Dimensional Drawing 153

FS3540

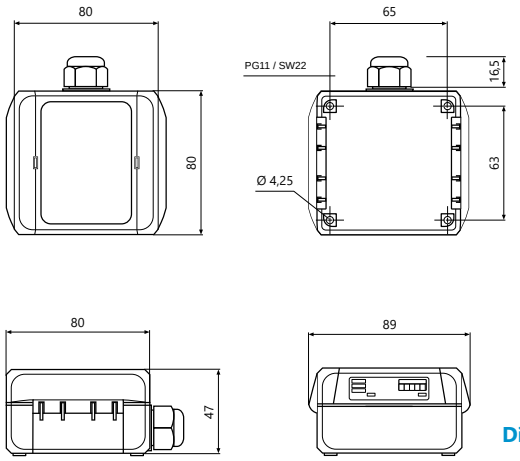

Dimensional Drawing 154

FS4408

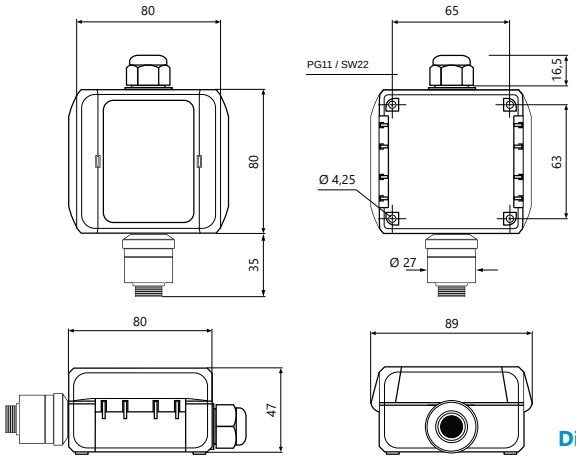

Dimensional Drawing 155

FS4309

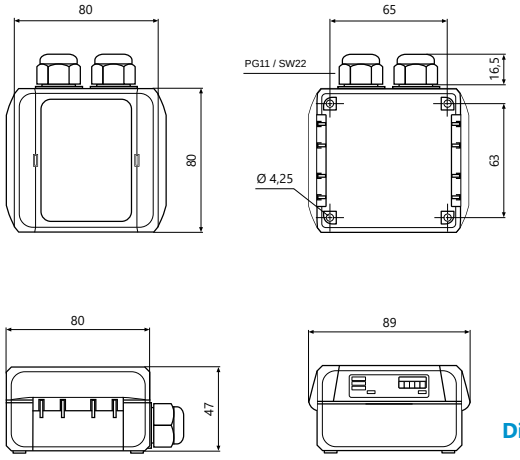

Dimensional Drawing 156

FS1308

80mm

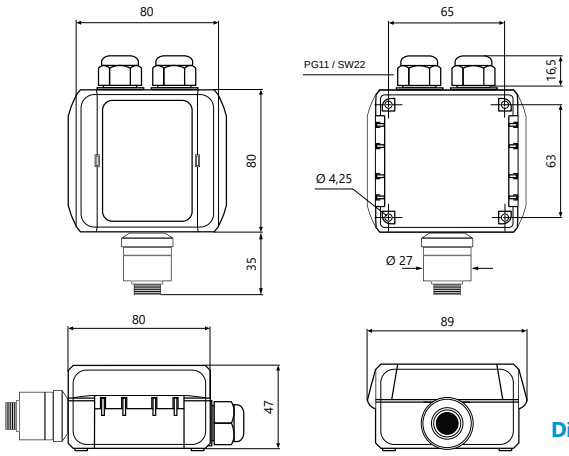

Dimensional Drawing 157

FS1309

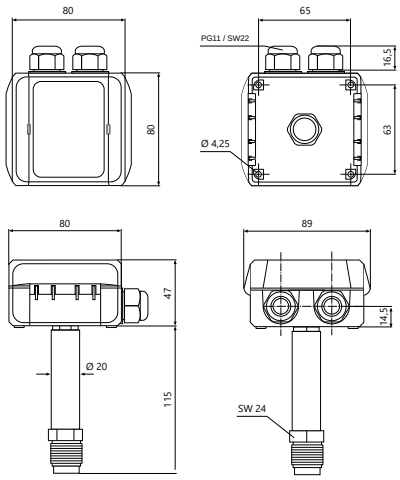

Dimensional Drawing 158

FS1135

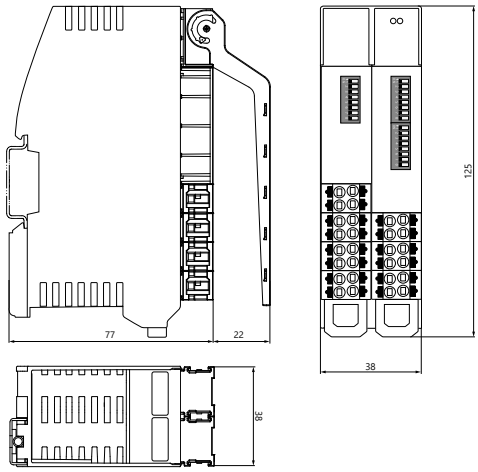

Dimensional Drawing 159

FS1701

80mm

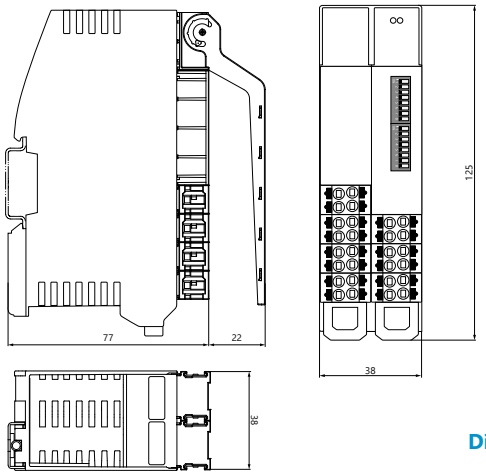

Dimensional Drawing 160

FS1702

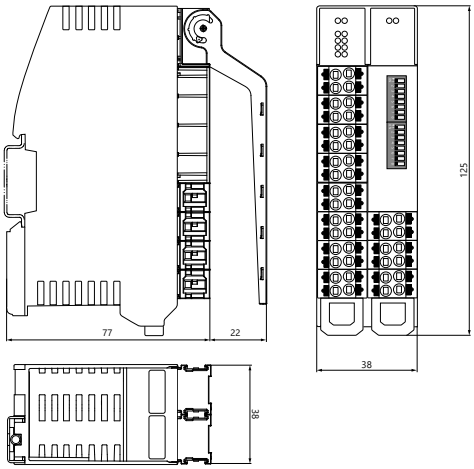

Dimensional Drawing 161

FS1703

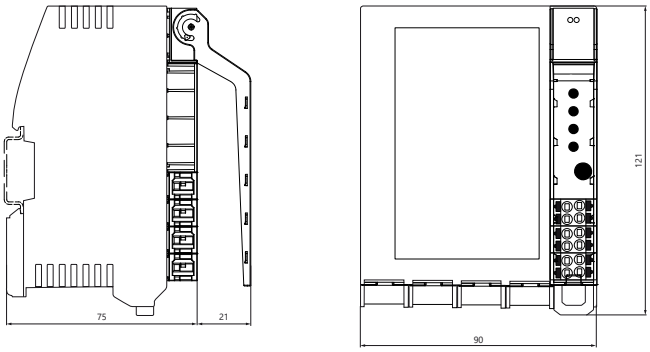

Dimensional Drawing 162

FS1704

80mm

AD/A

Article No. (CG 5)	Pressure	Output pressure	Version	Price EUR
AD/A-I	500...1150 mbar	4-20 mA	without display	**199,76**
AD/A-ID	500...1150 mbar	4-20 mA	with display	**251,78**
AD/A-IR	500...1150 mbar	4-20 mA, changer	without display	**210,16**
AD/A-IRD	500...1150 mbar	4-20 mA, changer	with display	**262,18**
AD/A-U	500...1150 mbar	0-10 V	without display	**199,76**
AD/A-UD	500...1150 mbar	0-10 V	with display	**251,78**
AD/A-UR	500...1150 mbar	0-10 V, changer	without display	**210,16**
AD/A-URD	500...1150 mbar	0-10 V, changer	with display	**262,18**

ADF/A

Article No. (CG 5)	Pressure	Non-linearity	Thread	Output pressure	Price EUR
ADF/A-I05	0...1 bar abs	±0,5% BFSL	G1/4 inch	4-20 mA	**179,35**
ADF/A-I10	0...1,6 bar abs	±0,5% BFSL	G1/4 inch	4-20 mA	**179,35**
ADF/A-I15	0...2,5 bar abs	±0,5% BFSL	G1/4 inch	4-20 mA	**179,35**
ADF/A-I20	0...4 bar abs	±0,5% BFSL	G1/4 inch	4-20 mA	**179,35**
ADF/A-I25	0...6 bar abs	±0,5% BFSL	G1/4 inch	4-20 mA	**179,35**
ADF/A-I30	0...10 bar abs	±0,5% BFSL	G1/4 inch	4-20 mA	**179,35**
ADF/A-I35	0...16 bar abs	±0,5% BFSL	G1/4 inch	4-20 mA	**179,35**
ADF/A-U05	0...1 bar abs	±0,5% BFSL	G1/4 inch	0-10 V	**179,35**
ADF/A-U10	0...1,6 bar abs	±0,5% BFSL	G1/4 inch	0-10 V	**179,35**
ADF/A-U15	0...2,5 bar abs	±0,5% BFSL	G1/4 inch	0-10 V	**179,35**
ADF/A-U20	0...4 bar abs	±0,5% BFSL	G1/4 inch	0-10 V	**179,35**
ADF/A-U25	0...6 bar abs	±0,5% BFSL	G1/4 inch	0-10 V	**179,35**
ADF/A-U30	0...10 bar abs	±0,5% BFSL	G1/4 inch	0-10 V	**179,35**
ADF/A-U35	0...16 bar abs	±0,5% BFSL	G1/4 inch	0-10 V	**179,35**

AF1/E

Article No. (CG 1)	Sensor	Price EUR
AF1/E-10	Pt100 (DIN EN 60751 Cl. B)	**19,10**
AF1/E-15	Pt500 (DIN EN 60751 Cl. B)	**19,10**
AF1/E-20	Pt1000 (DIN EN 60751 Cl. B)	**19,10**
AF1/E-30	Ni1000 (whirl-sintered)	**21,23**
AF1/E-40	Ni1000TK5000 (whirl-sintered)	**21,23**

Article No. (CG 1)	Sensor	Price EUR
AF1/E-60	LM235Z (±1%)	19,10
AF1/E-70	NTC20k (±1%)	19,10
AF1/E-80	NTC10k (±1%)	19,10
AF1/E-81	KTY 81-110 (±1%)	19,10
AF1/E-82	KTY 81-121 (±1%)	19,10
AF1/E-83	KTY 81-210 (KTY 10-6) (±1%)	19,10

AF2/E

Article No. (CG 1)	Sensor	Price EUR
AF2/E-10	Pt100 (DIN EN 60751 Cl. B)	33,96
AF2/E-20	Pt1000 (DIN EN 60751 Cl. B)	33,96
AF2/E-30	Ni1000 (whirl-sintered)	36,08
AF2/E-40	Ni1000TK5000 (whirl-sintered)	36,08
AF2/E-60	LM235Z (±1%)	33,96
AF2/E-70	NTC20k (±1%)	33,96
AF2/E-80	NTC10k (±1%)	33,96
AF2/E-81	KTY 81-110 (±1%)	33,96
AF2/E-82	KTY 81-121 (±1%)	33,96
AF2/E-83	KTY 81-210 (KTY 10-6) (±1%)	33,96

AM1/E

Article No. (CG 5)	MR temp. preset	Output temperature	Version	Price EUR
AM1/E-I	0...+100°C	4-20 mA	without display	96,04
AM1/E-I2R	0...+100°C	4-20 mA, 2 changer	without display	117,26
AM1/E-I2RD	0...+100°C	4-20 mA, 2 changer	with display	170,32
AM1/E-ID	0...+100°C	4-20 mA	with display	149,10
AM1/E-U	0...+100°C	0-10 V	without display	96,04
AM1/E-U2R	0...+100°C	0-10 V, 2 changer	without display	117,26
AM1/E-U2RD	0...+100°C	0-10 V, 2 changer	with display	170,32
AM1/E-UD	0...+100°C	0-10 V	with display	149,10

AM2/E

Article No. (CG 5)	MR temp. preset	Output temperature	Version	Price EUR
AM2/E-I	0...+100°C	4-20 mA	without display	**99,76**
AM2/E-I2R	0...+100°C	4-20 mA, 2 changer	without display	**120,98**
AM2/E-I2RD	0...+100°C	4-20 mA, 2 changer	with display	**174,04**
AM2/E-ID	0...+100°C	4-20 mA	with display	**152,82**
AM2/E-U	0...+100°C	0-10 V	without display	**99,76**
AM2/E-U2R	0...+100°C	0-10 V, 2 changer	without display	**120,98**
AM2/E-U2RD	0...+100°C	0-10 V, 2 changer	with display	**174,04**
AM2/E-UD	0...+100°C	0-10 V	with display	**152,82**

AM5/E

Article No. (CG 5)	MR temp. preset	Output temperature	Version	Price EUR
AM5/E-I	0...+100°C	4-20 mA	without display	**143,26**
AM5/E-ID	0...+100°C	4-20 mA	with display	**196,32**
AM5/E-U	0...+100°C	0-10 V	without display	**143,26**
AM5/E-UD	0...+100°C	0-10 V	with display	**196,32**

ASF/E

Article No. (CG 1)	Sensor	Price EUR
ASF/E-10	Pt100 (DIN EN 60751 Cl. B)	**65,79**
ASF/E-20	Pt1000 (DIN EN 60751 Cl. B)	**65,79**
ASF/E-30	Ni1000 (whirl-sintered)	**67,92**
ASF/E-40	Ni1000TK5000 (whirl-sintered)	**67,92**
ASF/E-50	NTC1,8k (±1%)	**65,79**
ASF/E-60	LM235Z (±1%)	**65,79**
ASF/E-70	NTC20k (±1%)	**65,79**
ASF/E-80	NTC10k (±1%)	**65,79**
ASF/E-81	KTY 81-110 (±1%)	**65,79**
ASF/E-82	KTY 81-121 (±1%)	**65,79**
ASF/E-83	KTY 81-210 (KTY 10-6) (±1%)	**65,79**

BF1/E

Article No. (CG 1)	Sensor	Bayonet peak	Bayonet cap	Cable	Price EUR
BF1/E-10/6.0/12-2	Pt100 (DIN EN 60751 Cl. B)	6 mm pointed 120°	12 mm	2 m glass fibre/ stainless steel netting (2x0,22 mm²)	**66,86**
BF1/E-10/6.0/12-5	Pt100 (DIN EN 60751 Cl. B)	6 mm pointed 120°	12 mm	5 m glass fibre/ stainless steel netting (2x0,22 mm²)	**78,00**
BF1/E-10/8.0/14-2	Pt100 (DIN EN 60751 Cl. B)	8 mm pointed 120°	14 mm	2 m glass fibre/ stainless steel netting (2x0,22 mm²)	**66,86**
BF1/E-10/8.0/14-5	Pt100 (DIN EN 60751 Cl. B)	8 mm pointed 120°	14 mm	5 m glass fibre/ stainless steel netting (2x0,22 mm²)	**78,00**
BF1/E-20/6.0/12-2	Pt1000 (DIN EN 60751 Cl. B)	6 mm pointed 120°	12 mm	2 m glass fibre/ stainless steel netting (2x0,22 mm²)	**66,86**
BF1/E-20/6.0/12-5	Pt1000 (DIN EN 60751 Cl. B)	6 mm pointed 120°	12 mm	5 m glass fibre/ stainless steel netting (2x0,22 mm²)	**78,00**
BF1/E-20/8.0/14-2	Pt1000 (DIN EN 60751 Cl. B)	8 mm pointed 120°	14 mm	2 m glass fibre/ stainless steel netting (2x0,22 mm²)	**66,86**
BF1/E-20/8.0/14-5	Pt1000 (DIN EN 60751 Cl. B)	8 mm pointed 120°	14 mm	5 m glass fibre/ stainless steel netting (2x0,22 mm²)	**78,00**

BF1/T

Article No. (CG 1)	Thermocouple	Bayonet peak	Bayonet cap	Cable	Price EUR
BF1/T-J/6.0/12-2	type J	6 mm pointed 120°	12 mm	2 m glass fibre/ stainless steel netting (2x0,22 mm²)	**36,08**
BF1/T-J/6.0/12-5	type J	6 mm pointed 120°	12 mm	5 m glass fibre/ stainless steel netting (2x0,22 mm²)	**48,82**
BF1/T-J/8.0/14-2	type J	8 mm pointed 120°	14 mm	2 m glass fibre/ stainless steel netting (2x0,22 mm²)	**36,08**
BF1/T-J/8.0/14-5	type J	8 mm pointed 120°	14 mm	5 m glass fibre/ stainless steel netting (2x0,22 mm²)	**48,82**
BF1/T-K/6.0/12-2	type K	6 mm pointed 120°	12 mm	2 m glass fibre/ stainless steel netting (2x0,22 mm²)	**36,08**
BF1/T-K/6.0/12-5	type K	6 mm pointed 120°	12 mm	5 m glass fibre/ stainless steel netting (2x0,22 mm²)	**48,82**
BF1/T-K/8.0/14-2	type K	8 mm pointed 120°	14 mm	2 m glass fibre/ stainless steel netting (2x0,22 mm²)	**36,08**
BF1/T-K/8.0/14-5	type K	8 mm pointed 120°	14 mm	5 m glass fibre/ stainless steel netting (2x0,22 mm²)	**48,82**
BF1/T-L/6.0/12-2	type L	6 mm pointed 120°	12 mm	2 m glass fibre/ stainless steel netting (2x0,22 mm²)	**36,08**
BF1/T-L/6.0/12-5	type L	6 mm pointed 120°	12 mm	5 m glass fibre/ stainless steel netting (2x0,22 mm²)	**48,82**
BF1/T-L/8.0/14-2	type L	8 mm pointed 120°	14 mm	2 m glass fibre/ stainless steel netting (2x0,22 mm²)	**36,08**
BF1/T-L/8.0/14-5	type L	8 mm pointed 120°	14 mm	5 m glass fibre/ stainless steel netting (2x0,22 mm²)	**48,82**

BF2/E

Article No. (CG 1)	Sensor	Bayonet peak	Bayonet cap	Cable	Price EUR
BF2/E-10/6.0/12-2	Pt100 (DIN EN 60751 Cl. B)	6 mm plane	12 mm	2 m glass fibre/ stainless steel netting (2x0,22 mm²)	**66,86**
BF2/E-10/6.0/12-5	Pt100 (DIN EN 60751 Cl. B)	6 mm plane	12 mm	5 m glass fibre/ stainless steel netting (2x0,22 mm²)	**78,00**

Article No. (CG 1)	Sensor	Bayonet peak	Bayonet cap	Cable	Price EUR
BF2/E-10/8.0/14-2	Pt100 (DIN EN 60751 Cl. B)	8 mm plane	14 mm	2 m glass fibre/ stainless steel netting (2x0,22 mm²)	66,86
BF2/E-10/8.0/14-5	Pt100 (DIN EN 60751 Cl. B)	8 mm plane	14 mm	5 m glass fibre/ stainless steel netting (2x0,22 mm²)	78,00
BF2/E-20/6.0/12-2	Pt1000 (DIN EN 60751 Cl. B)	6 mm plane	12 mm	2 m glass fibre/ stainless steel netting (2x0,22 mm²)	66,86
BF2/E-20/6.0/12-5	Pt1000 (DIN EN 60751 Cl. B)	6 mm plane	12 mm	5 m glass fibre/ stainless steel netting (2x0,22 mm²)	78,00
BF2/E-20/8.0/14-2	Pt1000 (DIN EN 60751 Cl. B)	8 mm plane	14 mm	2 m glass fibre/ stainless steel netting (2x0,22 mm²)	66,86
BF2/E-20/8.0/14-5	Pt1000 (DIN EN 60751 Cl. B)	8 mm plane	14 mm	5 m glass fibre/ stainless steel netting (2x0,22 mm²)	78,00

BF2/T

Article No. (CG 1)	Thermocouple	Bayonet peak	Bayonet cap	Cable	Price EUR
BF2/T-J/6.0/12-2	type J	6 mm plane	12 mm	2 m glass fibre/stainless steel netting (2x0,22 mm²)	36,08
BF2/T-J/6.0/12-5	type J	6 mm plane	12 mm	5 m glass fibre/stainless steel netting (2x0,22 mm²)	48,82
BF2/T-J/8.0/14-2	type J	8 mm plane	14 mm	2 m glass fibre/stainless steel netting (2x0,22 mm²)	36,08
BF2/T-J/8.0/14-5	type J	8 mm plane	14 mm	5 m glass fibre/stainless steel netting (2x0,22 mm²)	48,82
BF2/T-K/6.0/12-2	type K	6 mm plane	12 mm	2 m glass fibre/stainless steel netting (2x0,22 mm²)	36,08
BF2/T-K/6.0/12-5	type K	6 mm plane	12 mm	5 m glass fibre/stainless steel netting (2x0,22 mm²)	48,82
BF2/T-K/8.0/14-2	type K	8 mm plane	14 mm	2 m glass fibre/stainless steel netting (2x0,22 mm²)	36,08
BF2/T-K/8.0/14-5	type K	8 mm plane	14 mm	5 m glass fibre/stainless steel netting (2x0,22 mm²)	48,82
BF2/T-L/6.0/12-2	type L	6 mm plane	12 mm	2 m glass fibre/stainless steel netting (2x0,22 mm²)	36,08
BF2/T-L/6.0/12-5	type L	6 mm plane	12 mm	5 m glass fibre/stainless steel netting (2x0,22 mm²)	48,82
BF2/T-L/8.0/14-2	type L	8 mm plane	14 mm	2 m glass fibre/stainless steel netting (2x0,22 mm²)	36,08
BF2/T-L/8.0/14-5	type L	8 mm plane	14 mm	5 m glass fibre/stainless steel netting (2x0,22 mm²)	48,82

BFA/A

Article No. (CG 2)	Movement	Output movement	Price EUR
BFA/A-R	yes/no	change-over contact	**114,44**

BFD/A

Article No. (CG 2)	Movement	Output movement	Price EUR
BFD/A-R	yes/no	change-over contact	**132,13**

BFD2/A

Article No. (CG 2)	Movement	Output movement	Price EUR
BFD2/A-S	yes/no	potential-free normally open contact	**117,57**

BFR/A

Article No. (CG 2)	Movement	Output movement	Price EUR
BFR/A-R	yes/no	change-over contact	**114,44**

BHA/A

Article No. (CG 2)	Brightness (preset)	Movement	Output brightness	Output movement	Price EUR
BHA/A-UR	0-20 kLux	yes/no	0-10 V	change-over contact	**149,82**

BHR/A

Article No. (CG 2)	Brightness (preset)	Movement	Output brightness	Output movement	Price EUR
BHR/A-UR	0-1 kLux	yes/no	0-10 V	change-over contact	**149,82**

BHT-D/A

Article No. (CG 2)	Description	Price EUR
BHT-D/A-UR	Motion yes/no (change-over contact), Brightness: 0-1 kLux (0-10 V), Temperature: 0...+50°C (0-10 V)	239,29

BN/E

Article No. (CG 3)	Thread	Inside diameter	Outside diameter	Price EUR
BN/E-20/8.5-12	G1/4 inch	8,5 mm	12 mm	7,96
BN/E-20/8.5-14	G1/4 inch	8,5 mm	14 mm	7,96
BN/E-35/6.5-12	M10x1	6,5 mm	12 mm	7,96
BN/E-35/6.5-14	M10x1	6,5 mm	14 mm	7,96
BN/E-40/8.5-12	M12x1	8,5 mm	12 mm	7,96
BN/E-40/8.5-14	M12x1	8,5 mm	14 mm	7,96

CO-A/A

Article No. (CG 2)	CO	Output CO	Version	Price EUR
CO-A/A-UI	0-200/500/1000 ppm	0-10V, 4-20 mA	without display	230,29
CO-A/A-UID	0-200/500/1000 ppm	0-10V, 4-20 mA	with display	283,35
CO-A/A-UIR	0-200/500/1000 ppm	0-10 V, 4-20 mA, change-over contact	without display	240,89
CO-A/A-UIRD	0-200/500/1000 ppm	0-10 V, 4-20 mA, change-over contact	with display	293,95

CO-K/A

Article No. (CG 2)	CO	Output CO	Version	Price EUR
CO-K/A-UI	0-200/500/1000 ppm	0-10V, 4-20 mA	without display	230,29
CO-K/A-UID	0-200/500/1000 ppm	0-10V, 4-20 mA	with display	283,35
CO-K/A-UIR	0-200/500/1000 ppm	0-10 V, 4-20 mA, change-over contact	without display	240,89
CO-K/A-UIRD	0-200/500/1000 ppm	0-10 V, 4-20 mA, change-over contact	with display	293,95

CO-M/A

Article No. (CG 2)	Output	Description	Price EUR
CO-M/A-ID	4-20 mA, changer	CO: 0-200/500/1000 ppm , VOC: 0-100%, Humidity: 0...100% r.F., Temperature: -30...+70°C/-20...+80°C/0...+50°C/0... +100°C, Air pressure: 750...1150 mbar	**721,62**
CO-M/A-UD	0-10 V, changer	CO: 0-200/500/1000 ppm , VOC: 0-100%, Humidity: 0...100% r.F., Temperature: -30...+70°C/-20...+80°C/0...+50°C/0... +100°C, Air pressure: 750...1150 mbar	**657,95**

CO-R/A

Article No. (CG 2)	CO	Output CO	Version	Price EUR
CO-R/A-UI	0-200/500/1000 ppm	0-10V, 4-20 mA	without display	**201,63**
CO-R/A-UID	0-200/500/1000 ppm	0-10V, 4-20 mA	with display	**254,69**
CO-R/A-UIR	0-200/500/1000 ppm	0-10 V, 4-20 mA, change-over contact	without display	**212,24**
CO-R/A-UIRD	0-200/500/1000 ppm	0-10 V, 4-20 mA, change-over contact	with display	**265,30**

CO2-A/A

Article No. (CG 2)	CO2	Output CO2	Version	Price EUR
CO2-A/A-UI	0-2000/5000/10000 ppm	0-10 V, 4-20 mA	without display	**272,73**
CO2-A/A-UID	0-2000/5000/10000 ppm	0-10 V, 4-20 mA	with display	**325,79**
CO2-A/A-UIR	0-2000/5000/10000 ppm	0-10 V, 4-20 mA, Changer	without display	**283,35**
CO2-A/A-UIRD	0-2000/5000/10000 ppm	0-10 V, 4-20 mA, Changer	with display	**336,41**

CO2-K/A

Article No. (CG 2)	MR Selection CO2	Output CO2	Version	Price EUR
CO2-K/A-UI	0-2000/5000/10000 ppm	0-10 V, 4-20 mA	without display	**272,73**
CO2-K/A-UID	0-2000/5000/10000 ppm	0-10 V, 4-20 mA	with display	**325,79**
CO2-K/A-UIR	0-2000/5000/10000 ppm	0-10 V, 4-20 mA, Changer	without display	**283,35**
CO2-K/A-UIRD	0-2000/5000/10000 ppm	0-10 V, 4-20 mA, Changer	with display	**336,41**

CO2-M/A

Article No. (CG 2)	Output	Description	Price EUR
CO2-M/A-ID	4-20 mA, changer	CO2: 0-2000/5000/10000 ppm , VOC: 0-100%, Humidity: 0...100% r.F., Temperature: -30...+70°C/-20...+80°C/0...+50°C/0... +100°C, Air pressure: 750...1150 mbar	**721,62**
CO2-M/A-UD	0-10 V, changer	CO2: 0-2000/5000/10000 ppm , VOC: 0-100%, Humidity: 0...100% r.F., Temperature: -30...+70°C/-20...+80°C/0...+50°C/0... +100°C, Air pressure: 750...1150 mbar	**657,95**

CO2-P/A

Article No. (CG 2)	CO2	Output CO2	Cable	Equipment	Price EUR
CO2-P/A-UI	0-2000/5000/10000 ppm	0-10 V, 4-20 mA	2 m PVC	-	**332,57**
CO2-P/A-UID	0-2000/5000/10000 ppm	0-10 V, 4-20 mA	2 m PVC	Display	**387,70**
CO2-P/A-UIR	0-2000/5000/10000 ppm	0-10 V, 4-20 mA	2 m PVC	Relay	**343,79**
CO2-P/A-UIRD	0-2000/5000/10000 ppm	0-10 V, 4-20 mA	2 m PVC	Display, Relay	**398,41**

CO2-R/A

Article No. (CG 2)	CO2	Output CO2	Version CO2	Price EUR
CO2-R/A-ID	0-2000/5000/10000 ppm	4-20 mA	with Display	237,71
CO2-R/A-UI	0-2000/5000/10000 ppm	0-10 V, 4-20 mA	without Display	195,26
CO2-R/A-UID	0-2000/5000/10000 ppm	0-10 V, 4-20 mA	with Display	248,32
CO2-R/A-UIR	0-2000/5000/10000 ppm	0-10 V, 4-20 mA, Changer	without Display	205,88
CO2-R/A-UIRD	0-2000/5000/10000 ppm	0-10 V, 4-20 mA, Changer	with Display	258,94

CO2-U/A

Article No. (CG 2)	CO2	Output CO2	Light switch program	Price EUR
CO2-U/A-U	0-2000 ppm	0-10 V	GIRA Standard 55, pure white satin	272,73

CO2T-A/A

Article No. (CG 2)	CO2	Temperature	Output	Version	Price EUR
CO2T-A/A-I	0-2000/5000/10000 ppm	0...+50°C	2 x 4-20 mA	without display	304,56
CO2T-A/A-ID	0-2000/5000/10000 ppm	0...+50°C	2 x 4-20 mA	with display	357,62
CO2T-A/A-IR	0-2000/5000/10000 ppm	0...+50°C	2 x 4-20 mA, changer	without display	315,18
CO2T-A/A-IRD	0-2000/5000/10000 ppm	0...+50°C	2 x 4-20 mA, changer	with display	368,24
CO2T-A/A-U	0-2000/5000/10000 ppm	0...+50°C	2 x 0-10 V	without display	304,56
CO2T-A/A-UD	0-2000/5000/10000 ppm	0...+50°C	2 x 0-10 V	with display	357,62
CO2T-A/A-UR	0-2000/5000/10000 ppm	0...+50°C	2 x 0-10 V, changer	without display	315,18
CO2T-A/A-URD	0-2000/5000/10000 ppm	0...+50°C	2 x 0-10 V, changer	with display	368,24

CO2T-K/A

Article No. (CG 2)	MR Selection CO2	Temperature	Output	Version	Price EUR
CO2T-K/A-I	0-2000/5000/10000 ppm	0...+50°C	2 x 4-20 mA	without display	304,56
CO2T-K/A-ID	0-2000/5000/10000 ppm	0...+50°C	2 x 4-20 mA	with display	357,62
CO2T-K/A-IR	0-2000/5000/10000 ppm	0...+50°C	2 x 4-20 mA, changer	without display	315,18
CO2T-K/A-IRD	0-2000/5000/10000 ppm	0...+50°C	2 x 4-20 mA, changer	with display	368,24
CO2T-K/A-U	0-2000/5000/10000 ppm	0...+50°C	2 x 0-10 V	without display	304,56
CO2T-K/A-UD	0-2000/5000/10000 ppm	0...+50°C	2 x 0-10 V	with display	357,62
CO2T-K/A-UR	0-2000/5000/10000 ppm	0...+50°C	2 x 0-10 V, changer	without display	315,18
CO2T-K/A-URD	0-2000/5000/10000 ppm	0...+50°C	2 x 0-10 V, changer	with display	368,24

CO2T-R/A

Article No. (CG 2)	CO2	Temperature	Output	Version CO2	Price EUR
CO2T-R/A-I	0-2000/5000/10000 ppm	0...+50°C	2 x 4-20 mA	without Display	217,55
CO2T-R/A-ID	0-2000/5000/10000 ppm	0...+50°C	2 x 4-20 mA	with Display	270,61
CO2T-R/A-IR	0-2000/5000/10000 ppm	0...+50°C	2 x 4-20 mA, changer	without Display	228,16
CO2T-R/A-IRD	0-2000/5000/10000 ppm	0...+50°C	2 x 4-20 mA, changer	with Display	281,22
CO2T-R/A-U	0-2000/5000/10000 ppm	0...+50°C	2 x 0-10 V	without Display	217,55
CO2T-R/A-UD	0-2000/5000/10000 ppm	0...+50°C	2 x 0-10 V	with Display	270,61

continued on next page

Article No. (CG 2)	CO2	Temperature	Output	Version CO2	Price EUR
CO2T-R/A-UR	0-2000/5000/10000 ppm	0...+50°C	2 x 0-10 V, changer	without Display	228,16
CO2T-R/A-URD	0-2000/5000/10000 ppm	0...+50°C	2 x 0-10 V, changer	with Display	281,22

CO2VOC-A/A

Article No. (CG 2)	CO2	VOC	Output	Version	Price EUR
CO2VOC-A/A-IR	0-2000/5000/10000 ppm	0-100%	2 x 4-20 mA, changer	without display	419,18
CO2VOC-A/A-IRD	0-2000/5000/10000 ppm	0-100%	2 x 4-20 mA, changer	with display	472,24
CO2VOC-A/A-UR	0-2000/5000/10000 ppm	0-100%	2 x 0-10 V, changer	without display	419,18
CO2VOC-A/A-URD	0-2000/5000/10000 ppm	0-100%	2 x 0-10 V, changer	with display	472,24

CO2VOC-K/A

Article No. (CG 2)	CO2	VOC	Output	Version	Price EUR
CO2VOC-K/A-IR	0-2000/5000/10000 ppm	0-100%	2 x 4-20 mA, changer	without display	419,18
CO2VOC-K/A-IRD	0-2000/5000/10000 ppm	0-100%	2 x 4-20 mA, changer	with display	472,24
CO2VOC-K/A-UR	0-2000/5000/10000 ppm	0-100%	2 x 0-10 V, changer	without display	419,18
CO2VOC-K/A-URD	0-2000/5000/10000 ppm	0-100%	2 x 0-10 V, changer	with display	472,24

CO2VOC-R/A

Article No. (CG 2)	CO2	VOC	Output	Version	Price EUR
CO2VOC-R/A-IR	0-2000/5000/10000 ppm	0-100%	2 x 4-20 mA, changer	without display	328,97
CO2VOC-R/A-IRD	0-2000/5000/10000 ppm	0-100%	2 x 4-20 mA, changer	with display	382,03
CO2VOC-R/A-UR	0-2000/5000/10000 ppm	0-100%	2 x 0-10 V, changer	without display	328,97
CO2VOC-R/A-URD	0-2000/5000/10000 ppm	0-100%	2 x 0-10 V, changer	with display	382,03

COT-A/A

Article No. (CG 2)	CO	Temperature	Output	Version	Price EUR
COT-A/A-I	0-200/500/1000 ppm	0...+50°C	2 x 4-20 mA	without display	262,12
COT-A/A-ID	0-200/500/1000 ppm	0...+50°C	2 x 4-20 mA	with display	315,18
COT-A/A-IR	0-200/500/1000 ppm	0...+50°C	2 x 4-20 mA, changer	without display	272,73
COT-A/A-IRD	0-200/500/1000 ppm	0...+50°C	2 x 4-20 mA, changer	with display	325,79
COT-A/A-U	0-200/500/1000 ppm	0...+50°C	2 x 0-10 V	without display	262,12
COT-A/A-UD	0-200/500/1000 ppm	0...+50°C	2 x 0-10 V	with display	315,18
COT-A/A-UR	0-200/500/1000 ppm	0...+50°C	2 x 0-10 V, changer	without display	272,73
COT-A/A-URD	0-200/500/1000 ppm	0...+50°C	2 x 0-10 V, changer	with display	325,79

COT-K/A

Article No. (CG 2)	CO	Temperature	Output	Version	Price EUR
COT-K/A-I	0-200/500/1000 ppm	0...+50°C	2 x 4-20 mA	without display	262,12
COT-K/A-ID	0-200/500/1000 ppm	0...+50°C	2 x 4-20 mA	with display	315,18
COT-K/A-IR	0-200/500/1000 ppm	0...+50°C	2 x 4-20 mA, changer	without display	272,73
COT-K/A-IRD	0-200/500/1000 ppm	0...+50°C	2 x 4-20 mA, changer	with display	325,79
COT-K/A-U	0-200/500/1000 ppm	0...+50°C	2 x 0-10 V	without display	262,12
COT-K/A-UD	0-200/500/1000 ppm	0...+50°C	2 x 0-10 V	with display	315,18
COT-K/A-UR	0-200/500/1000 ppm	0...+50°C	2 x 0-10 V, changer	without display	272,73
COT-K/A-URD	0-200/500/1000 ppm	0...+50°C	2 x 0-10 V, changer	with display	325,79

COT-R/A

Article No. (CG 2)	CO	Temperature	Output	Version	Price EUR
COT-R/A-I	0-200/500/1000 ppm	0...+50°C	2 x 4-20 mA	without display	233,47
COT-R/A-ID	0-200/500/1000 ppm	0...+50°C	2 x 4-20 mA	with display	286,53
COT-R/A-IR	0-200/500/1000 ppm	0...+50°C	2 x 4-20 mA, changer	without display	244,08
COT-R/A-IRD	0-200/500/1000 ppm	0...+50°C	2 x 4-20 mA, changer	with display	297,14
COT-R/A-U	0-200/500/1000 ppm	0...+50°C	2 x 0-10 V	without display	233,47
COT-R/A-UD	0-200/500/1000 ppm	0...+50°C	2 x 0-10 V	with display	286,53
COT-R/A-UR	0-200/500/1000 ppm	0...+50°C	2 x 0-10 V, changer	without display	244,08
COT-R/A-URD	0-200/500/1000 ppm	0...+50°C	2 x 0-10 V, changer	with display	297,14

DF/E

Article No. (CG 1)	Sensor	Price EUR
DF/E-10	Pt100 (DIN EN 60751 Cl. B)	39,26
DF/E-20	Pt1000 (DIN EN 60751 Cl. B)	39,26
DF/E-30	Ni1000 (whirl-sintered)	41,39
DF/E-40	Ni1000TK5000 (whirl-sintered)	41,39
DF/E-60	LM235Z (±1%)	39,26
DF/E-70	NTC20k (±1%)	39,26
DF/E-80	NTC10k (±1%)	39,26
DF/E-81	KTY 81-110 (±1%)	39,26
DF/E-82	KTY 81-121 (±1%)	39,26
DF/E-83	KTY 81-210 (KTY 10-6) (±1%)	39,26

DMU/A

Article No. (CG 5)	Pressure	Volume flow	Output pressure	Version	Price EUR
DMU/A-I/V1	-500...+500 Pa	-	4-20 mA	without display	154,94
DMU/A-I/V2	-5000...+5000 Pa	-	4-20 mA	without display	154,94
DMU/A-ID/V1	-500...+500 Pa	-	4-20 mA	with display	208,00
DMU/A-ID/V2	-5000...+5000 Pa	-	4-20 mA	with display	208,00
DMU/A-IR/V1	-500...+500 Pa	-	4-20 mA, changer	without display	165,55
DMU/A-IR/V2	-5000...+5000 Pa	-	4-20 mA, changer	without display	165,55
DMU/A-IRD/V1	-500...+500 Pa	0-65.000 m^3/h	4-20 mA, changer	with display	218,61
DMU/A-IRD/V2	-5000...+5000 Pa	0-200.000 m^3/h	4-20 mA, changer	with display	218,61
DMU/A-U/V1	-500...+500 Pa	-	0-10 V	without display	154,94
DMU/A-U/V2	-5000...+5000 Pa	-	0-10 V	without display	154,94
DMU/A-U/V3	-100...+100 Pa	-	0-10 V	without display	218,61
DMU/A-UD/V1	-500...+500 Pa	-	0-10 V	with display	208,00
DMU/A-UD/V2	-5000...+5000 Pa	-	0-10 V	with display	208,00
DMU/A-UD/V3	-100...+100 Pa	-	0-10 V	with display	271,67
DMU/A-UR/V1	-500...+500 Pa	-	0-10 V, changer	without display	165,55
DMU/A-UR/V2	-5000...+5000 Pa	-	0-10 V, changer	without display	165,55
DMU/A-UR/V3	-100...+100 Pa	-	0-10 V, changer	without display	229,22

continued on next page

Article No. (CG 5)	Pressure	Volume flow	Output pressure	Version	Price EUR
DMU/A-URD/V1	-500...+500 Pa	0-65.000 m³/h	0-10 V, changer	with display	218,61
DMU/A-URD/V2	-5000...+5000 Pa	0-200.000 m³/h	0-10 V, changer	with display	218,61
DMU/A-URD/V3	-100...+100 Pa	0-30.000 m³/h	0-10 V, changer	with display	282,29

DMU2/A

Article No. (CG 5)	Pressure	Output pressure	Version	Price EUR
DMU2/A-I/V1	-500...+500 Pa	4-20 mA	without display	219,30
DMU2/A-I/V2	-5000...+5000 Pa	4-20 mA	without display	219,30
DMU2/A-U/V1	-500...+500 Pa	0-10 V	without display	219,30
DMU2/A-U/V2	-5000...+5000 Pa	0-10 V	without display	219,30
DMU2/A-U/V3	-100...+100 Pa	0-10 V	without display	280,50

DT/D

Article No. (CG 5)	Pressure	Non-linearity	Thread	Output pressure	Price EUR
DT/D-IA	0...0,6 bar	±0,5% BFSL	G1/4 inch	4-20 mA	147,51
DT/D-IB	0...1 bar	±0,5% BFSL	G1/4 inch	4-20 mA	147,51
DT/D-IC	0...1,6 bar	±0,5% BFSL	G1/4 inch	4-20 mA	147,51
DT/D-ID	0...2,5 bar	±0,5% BFSL	G1/4 inch	4-20 mA	147,51
DT/D-IF	0...6 bar	±0,5% BFSL	G1/4 inch	4-20 mA	147,51
DT/D-IG	0...10 bar	±0,5% BFSL	G1/4 inch	4-20 mA	147,51
DT/D-IH	0...16 bar	±0,5% BFSL	G1/4 inch	4-20 mA	147,51
DT/D-II	0...25 bar	±0,5% BFSL	G1/4 inch	4-20 mA	147,51
DT/D-IJ	0...60 bar	±0,5% BFSL	G1/4 inch	4-20 mA	147,51
DT/D-IK	0...100 bar	±0,5% BFSL	G1/4 inch	4-20 mA	147,51
DT/D-IK1	0...160 bar	±0,5% BFSL	G1/4 inch	4-20 mA	147,51
DT/D-IL	0...250 bar	±0,5% BFSL	G1/4 inch	4-20 mA	147,51
DT/D-IM	0...600 bar	±0,5% BFSL	G1/4 inch	4-20 mA	147,51
DT/D-IN	0...1000 bar	±0,5% BFSL	G1/4 inch	4-20 mA	211,18
DT/D-UA	0...0,6 bar	±0,5% BFSL	G1/4 inch	0-10 V	147,51
DT/D-UB	0...1 bar	±0,5% BFSL	G1/4 inch	0-10 V	147,51

Article No. (CG 5)	Pressure	Non-linearity	Thread	Output pressure	Price EUR
DT/D-UC	0...1,6 bar	±0,5% BFSL	G1/4 inch	0-10 V	**147,51**
DT/D-UD	0...2,5 bar	±0,5% BFSL	G1/4 inch	0-10 V	**147,51**
DT/D-UF	0...6 bar	±0,5% BFSL	G1/4 inch	0-10 V	**147,51**
DT/D-UG	0...10 bar	±0,5% BFSL	G1/4 inch	0-10 V	**147,51**
DT/D-UH	0...16 bar	±0,5% BFSL	G1/4 inch	0-10 V	**147,51**
DT/D-UI	0...25 bar	±0,5% BFSL	G1/4 inch	0-10 V	**147,51**
DT/D-UJ	0...60 bar	±0,5% BFSL	G1/4 inch	0-10 V	**147,51**
DT/D-UK	0...100 bar	±0,5% BFSL	G1/4 inch	0-10 V	**147,51**
DT/D-UK1	0...160 bar	±0,5% BFSL	G1/4 inch	0-10 V	**147,51**
DT/D-UL	0...250 bar	±0,5% BFSL	G1/4 inch	0-10 V	**147,51**
DT/D-UM	0...600 bar	±0,5% BFSL	G1/4 inch	0-10 V	**147,51**
DT/D-UN	0...1000 bar	±0,5% BFSL	G1/4 inch	0-10 V	**211,18**

DT/G

Article No. (CG 3)	Temperature	Supply voltage	Measurement input	Price EUR
DT/G-10	-60...+199.9°C	12V DC/AC or 24 V DC/AC	Pt100 (2-wire)	**61,55**
DT/G-20	-50...+1150°C	12V DC/AC or 24 V DC/AC	type K (NiCr-Ni)	**61,55**

DTA/D

Article No. (CG 3)	Description	Price EUR
DTA/D-1	adapter G1/4 to G1/2 inch	**9,02**

DW/H

Article No. (CG 1)	Pressure	Repeatability	Differential	Price EUR
DW/H-10	20...200 Pa	±5%, min. ±5 Pa	10 Pa	**30,77**
DW/H-20	30...400 Pa	±5%, min. ±5 Pa	15 Pa	**30,77**
DW/H-40	50...500 Pa	±2,5%, min. ±5 Pa	20 Pa	**30,77**
DW/H-50	200...1000 Pa	±1%, min. ±5 Pa	100 Pa	**30,77**
DW/H-60	500...2500 Pa	±1%, min. ±5 Pa	150 Pa	**30,77**
DW/H-70	1000...5000 Pa	±1%, min. ±5 Pa	250 Pa	**30,77**

EF1/E

Article No. (CG 1)	Sensor	Installation length	Price EUR
EF1/E-10/050	Pt100 (DIN EN 60751 Cl. B)	50 mm	**39,26**
EF1/E-20/050	Pt1000 (DIN EN 60751 Cl. B)	50 mm	**39,26**
EF1/E-30/050	Ni1000 (whirl-sintered)	50 mm	**41,39**
EF1/E-40/050	Ni1000TK5000 (whirl-sintered)	50 mm	**41,39**
EF1/E-60/050	LM235Z (±1%)	50 mm	**39,26**
EF1/E-70/050	NTC20k (±1%)	50 mm	**39,26**
EF1/E-80/050	NTC10k (±1%)	50 mm	**39,26**
EF1/E-83/050	KTY 81-210 (KTY 10-6) (±1%)	50 mm	**39,26**
Available in other installation lengths			**special versions see page 24**

EF2/E

Article No. (CG 1)	Sensor	Installation length	Price EUR
EF2/E-10/100	Pt100 (DIN EN 60751 Cl. B)	100 mm	**46,70**
EF2/E-20/100	Pt1000 (DIN EN 60751 Cl. B)	100 mm	**46,70**
EF2/E-30/100	Ni1000 (whirl-sintered)	100 mm	**48,82**
EF2/E-40/100	Ni1000TK5000 (whirl-sintered)	100 mm	**48,82**
EF2/E-60/100	LM235Z (±1%)	100 mm	**46,70**
EF2/E-70/100	NTC20k (±1%)	100 mm	**46,70**
EF2/E-80/100	NTC10k (±1%)	100 mm	**46,70**
EF2/E-83/050	KTY 81-210 (KTY 10-6) (±1%)	50 mm	**45,10**
EF2/E-83/100	KTY 81-210 (KTY 10-6) (±1%)	100 mm	**46,70**
Available in other installation lengths			**special versions see page 24**

EF3/E

Article No. (CG 1)	Sensor	Installation length	Price EUR
EF3/E-10/100	Pt100 (DIN EN 60751 Cl. B)	100 mm	74,82
EF3/E-20/100	Pt1000 (DIN EN 60751 Cl. B)	100 mm	74,82
Available in other installation lengths			special versions see page 24

EF4/E

Article No. (CG 1)	Sensor	Temperature	Installation length	Price EUR
EF4/E-10/100	Pt100 (DIN EN 60751 Cl. B)	-30...+180°C	100 mm	79,59
EF4/E-10/100H	Pt100 (DIN EN 60751 Cl. B)	-30...+600°C	100 mm	149,63
EF4/E-20/100	Pt1000 (DIN EN 60751 Cl. B)	-30...+180°C	100 mm	79,59
EF4/E-20/100H	Pt1000 (DIN EN 60751 Cl. B)	-30...+600°C	100 mm	149,63
Available in other installation lengths				special versions see page 24

EF4/T

Article No. (CG 1)	Thermocouple	Installation length	Price EUR
EF4/T-J/100	type J	100 mm	130,00
EF4/T-K/100	type K	100 mm	130,00
EF4/T-L/100	type L	100 mm	130,00
Available in other installation lengths			special versions see page 24

EF5/E

Article No. (CG 1)	Sensor	Cable	Installation length	Price EUR
EF5/E-10/2	Pt100 (DIN EN 60751 Cl. B)	2 m silicone (2x0,22 mm^2)	100 mm	28,65
EF5/E-20/2	Pt1000 (DIN EN 60751 Cl. B)	2 m silicone (2x0,22 mm^2)	100 mm	28,65
EF5/E-30/2	Ni1000 (whirl-sintered)	2 m silicone (2x0,22 mm^2)	100 mm	30,77
EF5/E-40/2	Ni1000TK5000 (whirl-sintered)	2 m silicone (2x0,22 mm^2)	100 mm	30,77
EF5/E-60/2	LM235Z (±1%)	2 m silicone (2x0,22 mm^2)	100 mm	28,65

continued on next page

Article No. (CG 1)	Sensor	Cable	Installation length	Price EUR
EF5/E-70/2	NTC20k (±1%)	2 m silicone (2x0,22 mm²)	100 mm	28,65
EF5/E-80/2	NTC10k (±1%)	2 m silicone (2x0,22 mm²)	100 mm	28,65
EF5/E-81/2	KTY 81-110 (±1%)	2 m silicone (2x0,22 mm²)	100 mm	28,65
EF5/E-82/2	KTY 81-121 (±1%)	2 m silicone (2x0,22 mm²)	100 mm	28,65
EF5/E-83/2	KTY 81-210 (KTY 10-6) (±1%)	2 m silicone (2x0,22 mm²)	100 mm	28,65
Available in other cable lengths				special versions see page 24

EF6/E

Article No. (CG 1)	Sensor	Temperature	Installation length	Price EUR
EF6/E-10/050	Pt100 (DIN EN 60751 Cl. B)	-30...+180°C	50 mm	50,94
EF6/E-10/050H	Pt100 (DIN EN 60751 Cl. B)	-70...+550°C	50 mm	78,53
EF6/E-20/050	Pt1000 (DIN EN 60751 Cl. B)	-30...+180°C	50 mm	50,94
EF6/E-20/050H	Pt1000 (DIN EN 60751 Cl. B)	-70...+550°C	50 mm	78,53
Available in other installation lengths				special versions see page 24

EF7/E

Article No. (CG 1)	Sensor	Temperature	Installation length	Price EUR
EF7/E-10/050	Pt100 (DIN EN 60751 Cl. B)	-30...+180°C	50 mm	49,35
EF7/E-20/050	Pt1000 (DIN EN 60751 Cl. B)	-30...+180°C	50 mm	49,35
Available in other installation lengths				special versions see page 24

EF8/E

Article No. (CG 1)	Sensor	Temperature	Installation length	Thread	Price EUR
EF8/E-10/050	Pt100 (DIN EN 60751 Cl. B)	-30...+90°C	50 mm	M10x1	44,57

Article No. (CG 1)	Sensor	Temperature	Installation length	Thread	Price EUR
EF8/E-10/100	Pt100 (DIN EN 60751 Cl. B)	-30...+90°C	100 mm	M10x1	**46,17**
EF8/E-10/150	Pt100 (DIN EN 60751 Cl. B)	-30...+90°C	150 mm	M10x1	**47,76**
EF8/E-10/200	Pt100 (DIN EN 60751 Cl. B)	-30...+90°C	200 mm	M10x1	**49,35**
EF8/E-10/250	Pt100 (DIN EN 60751 Cl. B)	-30...+90°C	250 mm	M10x1	**50,94**
EF8/E-10/300	Pt100 (DIN EN 60751 Cl. B)	-30...+90°C	300 mm	M10x1	**52,53**
EF8/E-10/350	Pt100 (DIN EN 60751 Cl. B)	-30...+90°C	350 mm	M10x1	**54,12**
EF8/E-10/400	Pt100 (DIN EN 60751 Cl. B)	-30...+90°C	400 mm	M10x1	**55,71**
EF8/E-20/050	Pt1000 (DIN EN 60751 Cl. B)	-30...+90°C	50 mm	M10x1	**44,57**
EF8/E-20/100	Pt1000 (DIN EN 60751 Cl. B)	-30...+90°C	100 mm	M10x1	**46,17**
EF8/E-20/150	Pt1000 (DIN EN 60751 Cl. B)	-30...+90°C	150 mm	M10x1	**47,76**
EF8/E-20/200	Pt1000 (DIN EN 60751 Cl. B)	-30...+90°C	200 mm	M10x1	**49,35**
EF8/E-20/250	Pt1000 (DIN EN 60751 Cl. B)	-30...+90°C	250 mm	M10x1	**50,94**
EF8/E-20/300	Pt1000 (DIN EN 60751 Cl. B)	-30...+90°C	300 mm	M10x1	**52,53**
EF8/E-20/350	Pt1000 (DIN EN 60751 Cl. B)	-30...+90°C	350 mm	M10x1	**54,12**
EF8/E-20/400	Pt1000 (DIN EN 60751 Cl. B)	-30...+90°C	400 mm	M10x1	**55,71**

EM/E

Article No. (CG 5)	MR temp. preset	Output temperature	Installation length	Version	Price EUR
EM/E-I100	0...+100°C	4-20 mA	100 mm	without display	**105,06**
EM/E-I100-2R	0...+100°C	4-20 mA, 2 changer	100 mm	without display	**126,29**
EM/E-I100D	0...+100°C	4-20 mA	100 mm	with display	**158,12**
EM/E-I100D-2R	0...+100°C	4-20 mA, 2 changer	100 mm	with display	**179,35**
EM/E-U100	0...+100°C	0-10 V	100 mm	without display	**105,06**
EM/E-U100-2R	0...+100°C	0-10 V, 2 changer	100 mm	without display	**126,29**
EM/E-U100D	0...+100°C	0-10 V	100 mm	with display	**158,12**
EM/E-U100D-2R	0...+100°C	0-10 V, 2 changer	100 mm	with display	**179,35**
Available in other installation lengths					**special versions see page 24**

EM2/E

Article No. (CG 5)	MR temp. preset	Output temperature	Installation length	Version	Price EUR
EM2/E-I100	0...+100°C	4-20 mA	100 mm	without display	112,49
EM2/E-I100-2R	0...+100°C	4-20 mA, 2 changer	100 mm	without display	133,71
EM2/E-I100D	0...+100°C	4-20 mA	100 mm	with display	165,55
EM2/E-I100D-2R	0...+100°C	4-20 mA, 2 changer	100 mm	with display	186,77
EM2/E-U100	0...+100°C	0-10 V	100 mm	without display	112,49
EM2/E-U100-2R	0...+100°C	0-10 V, 2 changer	100 mm	without display	133,71
EM2/E-U100D	0...+100°C	0-10 V	100 mm	with display	165,55
EM2/E-U100D-2R	0...+100°C	0-10 V, 2 changer	100 mm	with display	186,77
Available in other installation lengths					special versions see page 24

EM3/E

Article No. (CG 5)	MR temp. preset	Output temperature	Installation length	Price EUR
EM3/E-I100	0...+100°C	4-20 mA	100 mm	156,00
EM3/E-I200	0...+100°C	4-20 mA	200 mm	160,24
EM3/E-I300	0...+100°C	4-20 mA	300 mm	164,49
EM3/E-I400	0...+100°C	4-20 mA	400 mm	168,73
EM3/E-U100	0...+100°C	0-10 V	100 mm	156,00
EM3/E-U200	0...+100°C	0-10 V	200 mm	160,24
EM3/E-U300	0...+100°C	0-10 V	300 mm	164,49
EM3/E-U400	0...+100°C	0-10 V	400 mm	168,73

EM4/E

Article No. (CG 5)	MR temp. preset	Output temperature	Installation length	Price EUR
EM4/E-I100	0...+100°C	4-20 mA	100 mm	179,35
EM4/E-I200	0...+100°C	4-20 mA	200 mm	183,59
EM4/E-I300	0...+100°C	4-20 mA	300 mm	187,83
EM4/E-I400	0...+100°C	4-20 mA	400 mm	192,08
EM4/E-U100	0...+100°C	0-10 V	100 mm	179,35
EM4/E-U200	0...+100°C	0-10 V	200 mm	183,59

Article No. (CG 5)	MR temp. preset	Output temperature	Installation length	Price EUR
EM4/E-U300	0...+100°C	0-10 V	300 mm	187,83
EM4/E-U400	0...+100°C	0-10 V	400 mm	192,08
Available in other installation lengths				special versions see page 24

EM5/E

Article No. (CG 5)	MR temp. preset	Output temperature	Cable	Version	Price EUR
EM5/E-I	0...+100°C	4-20 mA	2 m silicone (2x0,22 mm²)	without display	110,36
EM5/E-I2R	0...+100°C	4-20 mA, 2 changer	2 m silicone (2x0,22 mm²)	without display	131,59
EM5/E-I2RD	0...+100°C	4-20 mA, 2 changer	2 m silicone (2x0,22 mm²)	with display	184,65
EM5/E-ID	0...+100°C	4-20 mA	2 m silicone (2x0,22 mm²)	with display	163,42
EM5/E-U	0...+100°C	0-10 V	2 m silicone (2x0,22 mm²)	without display	110,36
EM5/E-U2R	0...+100°C	0-10 V, 2 changer	2 m silicone (2x0,22 mm²)	without display	131,59
EM5/E-U2RD	0...+100°C	0-10 V, 2 changer	2 m silicone (2x0,22 mm²)	with display	184,65
EM5/E-UD	0...+100°C	0-10 V	2 m silicone (2x0,22 mm²)	with display	163,42

FS1001

Article No. (CG 4)	Temperature	Output	Equipment	Price EUR
FS1001-MBR-T1-D	-50...+250°C	Modbus RTU	Display	169,48
FS1001-MBR-T1-DR	-50...+250°C	Modbus RTU	Display, Relay	189,88
FS1001-MBR-T1-R	-50...+250°C	Modbus RTU	Relay	138,88
FS1001-MBR-T1-X	-50...+250°C	Modbus RTU	-	118,48

FS1002

Article No. (CG 4)	Temperature	Output	Equipment	Price EUR
FS1002-MBR-T1-D	-50...+250°C	Modbus RTU	Display	174,84
FS1002-MBR-T1-DR	-50...+250°C	Modbus RTU	Display, Relay	195,24
FS1002-MBR-T1-R	-50...+250°C	Modbus RTU	Relay	144,24
FS1002-MBR-T1-X	-50...+250°C	Modbus RTU	-	123,84

FS1021

Article No. (CG 4)	Temperature	Installation length	Output	Equipment	Price EUR
FS1021-MBR-T1-050-D	-50...+250°C	50 mm	Modbus RTU	Display	175,63
FS1021-MBR-T1-050-DR	-50...+250°C	50 mm	Modbus RTU	Display, Relay	196,03
FS1021-MBR-T1-050-R	-50...+250°C	50 mm	Modbus RTU	Relay	145,03
FS1021-MBR-T1-050-X	-50...+250°C	50 mm	Modbus RTU	-	124,63
Available in other installation lengths					special versions see page 24

FS1022

Article No. (CG 4)	Temperature	Installation length	Output	Equipment	Price EUR
FS1022-MBR-T1-050-D	-50...+250°C	50 mm	Modbus RTU	Display	176,98
FS1022-MBR-T1-050-DR	-50...+250°C	50 mm	Modbus RTU	Display, Relay	197,38
FS1022-MBR-T1-050-R	-50...+250°C	50 mm	Modbus RTU	Relay	146,38
FS1022-MBR-T1-050-X	-50...+250°C	50 mm	Modbus RTU	-	125,98
Available in other installation lengths					special versions see page 24

FS1023

Article No. (CG 4)	Temperature	Installation length	Output	Equipment	Price EUR
FS1023-MBR-T1-050-D	-50...+250°C	50 mm	Modbus RTU	Display	183,94
FS1023-MBR-T1-050-DR	-50...+250°C	50 mm	Modbus RTU	Display, Relay	204,34
FS1023-MBR-T1-050-R	-50...+250°C	50 mm	Modbus RTU	Relay	153,34
FS1023-MBR-T1-050-X	-50...+250°C	50 mm	Modbus RTU	-	132,94
Available in other installation lengths					special versions see page 24

FS1030

Article No. (CG 4)	Temperature	Rod length	Output	Equipment	Price EUR
FS1030-MBR-T1-600-D	-50...+250°C	6 m	Modbus RTU	Display	328,79
FS1030-MBR-T1-600-DR	-50...+250°C	6 m	Modbus RTU	Display, Relay	349,19
FS1030-MBR-T1-600-R	-50...+250°C	6 m	Modbus RTU	Relay	298,19
FS1030-MBR-T1-600-X	-50...+250°C	6 m	Modbus RTU	-	277,79
Available in other rod lengths					special versions see page 24

FS1040

Article No. (CG 4)	Temperature	Cable	Output	Equipment	Price EUR
FS1040-MBR-T1-2-D	-50...+250°C	2 m silicone (2x0,22 mm^2)	Modbus RTU	Display	181,53
FS1040-MBR-T1-2-DR	-50...+250°C	2 m silicone (2x0,22 mm^2)	Modbus RTU	Display, Relay	201,93
FS1040-MBR-T1-2-R	-50...+250°C	2 m silicone (2x0,22 mm^2)	Modbus RTU	Relay	150,93
FS1040-MBR-T1-2-X	-50...+250°C	2 m silicone (2x0,22 mm^2)	Modbus RTU	-	130,53

FS1041

Article No. (CG 4)	Temperature	Cable	Output	Equipment	Price EUR
FS1041-MBR-T1-2-D	-50...+250°C	2 m PTFE (2x0,22 mm²)	Modbus RTU	Display	196,26
FS1041-MBR-T1-2-DR	-50...+250°C	2 m PTFE (2x0,22 mm²)	Modbus RTU	Display, Relay	216,66
FS1041-MBR-T1-2-R	-50...+250°C	2 m PTFE (2x0,22 mm²)	Modbus RTU	Relay	165,66
FS1041-MBR-T1-2-X	-50...+250°C	2 m PTFE (2x0,22 mm²)	Modbus RTU	-	145,26

FS1042

Article No. (CG 4)	Temperature	Cable	Output	Equipment	Price EUR
FS1042-MBR-T1-2-D	-50...+250°C	2 m PVC (2x0,25 mm²)	Modbus RTU	Display	225,71
FS1042-MBR-T1-2-DR	-50...+250°C	2 m PVC (2x0,25 mm²)	Modbus RTU	Display, Relay	246,11
FS1042-MBR-T1-2-R	-50...+250°C	2 m PVC (2x0,25 mm²)	Modbus RTU	Relay	195,11
FS1042-MBR-T1-2-X	-50...+250°C	2 m PVC (2x0,25 mm²)	Modbus RTU	-	174,71

FS1043

Article No. (CG 4)	Temperature	Cable	Output	Equipment	Price EUR
FS1043-MBR-T1-2-D	-50...+250°C	2 m PVC (2x0,25 mm²)	Modbus RTU	Display	209,64
FS1043-MBR-T1-2-DR	-50...+250°C	2 m PVC (2x0,25 mm²)	Modbus RTU	Display, Relay	230,04
FS1043-MBR-T1-2-R	-50...+250°C	2 m PVC (2x0,25 mm²)	Modbus RTU	Relay	179,04
FS1043-MBR-T1-2-X	-50...+250°C	2 m PVC (2x0,25 mm²)	Modbus RTU	-	158,64

FS1050

Article No. (CG 4)	Temperature	Cable	Output	Equipment	Price EUR
FS1050-MBR-T1-2-D	-50...+250°C	2 m PVC (2x0,14 mm²)	Modbus RTU	Display	188,22
FS1050-MBR-T1-2-DR	-50...+250°C	2 m PVC (2x0,14 mm²)	Modbus RTU	Display, Relay	208,62
FS1050-MBR-T1-2-R	-50...+250°C	2 m PVC (2x0,14 mm²)	Modbus RTU	Relay	157,62
FS1050-MBR-T1-2-X	-50...+250°C	2 m PVC (2x0,14 mm²)	Modbus RTU	-	137,22

FS1051

Article No. (CG 4)	Temperature	Cable	Output	Equipment	Price EUR
FS1051-MBR-T1-2-D	-50...+250°C	2 m glass fibre/ stainless steel netting (2x0,22 mm²)	Modbus RTU	Display	196,26
FS1051-MBR-T1-2-DR	-50...+250°C	2 m glass fibre/ stainless steel netting (2x0,22 mm²)	Modbus RTU	Display, Relay	216,66
FS1051-MBR-T1-2-R	-50...+250°C	2 m glass fibre/ stainless steel netting (2x0,22 mm²)	Modbus RTU	Relay	165,66
FS1051-MBR-T1-2-X	-50...+250°C	2 m glass fibre/ stainless steel netting (2x0,22 mm²)	Modbus RTU	-	145,26

FS1052

Article No. (CG 4)	Temperature	Cable	Output	Equipment	Price EUR
FS1052-MBR-T1-2-D	-50...+250°C	2 m silicone (2x0,22 mm²)	Modbus RTU	Display	231,06
FS1052-MBR-T1-2-DR	-50...+250°C	2 m silicone (2x0,22 mm²)	Modbus RTU	Display, Relay	251,46
FS1052-MBR-T1-2-R	-50...+250°C	2 m silicone (2x0,22 mm²)	Modbus RTU	Relay	200,46
FS1052-MBR-T1-2-X	-50...+250°C	2 m silicone (2x0,22 mm²)	Modbus RTU	-	180,06

FS1053

Article No. (CG 4)	Temperature	Cable	Output	Equipment	Price EUR
FS1053-MBR-T1-2-D	-50...+250°C	2 m silicone (2x0,22 mm²)	Modbus RTU	Display	188,22
FS1053-MBR-T1-2-DR	-50...+250°C	2 m silicone (2x0,22 mm²)	Modbus RTU	Display, Relay	208,62
FS1053-MBR-T1-2-R	-50...+250°C	2 m silicone (2x0,22 mm²)	Modbus RTU	Relay	157,62
FS1053-MBR-T1-2-X	-50...+250°C	2 m silicone (2x0,22 mm²)	Modbus RTU	-	137,22

FS1060

Article No. (CG 4)	Temperature	Output	Equipment	Price EUR
FS1060-MBR-T1-D	-50...+250°C	Modbus RTU	Display	174,84
FS1060-MBR-T1-DR	-50...+250°C	Modbus RTU	Display, Relay	195,24
FS1060-MBR-T1-R	-50...+250°C	Modbus RTU	Relay	144,24
FS1060-MBR-T1-X	-50...+250°C	Modbus RTU	-	123,84

FS1080

Article No. (CG 4)	Temperature	Output	Equipment	Price EUR
FS1080-MBR-T1-D	-50...+250°C	Modbus RTU	Display	161,45
FS1080-MBR-T1-DR	-50...+250°C	Modbus RTU	Display, Relay	181,85
FS1080-MBR-T1-R	-50...+250°C	Modbus RTU	Relay	130,85
FS1080-MBR-T1-X	-50...+250°C	Modbus RTU	-	110,45

FS1100

Article No. (CG 4)	Humidity	Temperature	Output	Equipment	Price EUR
FS1100-MBR-H1T1-D	0-100% r.H., 0-80 g/m³, 0-80 g/kg, -20...+80°C DP	-20...+80°C	Modbus RTU	Display	243,78

Article No. (CG 4)	Humidity	Temperature	Output	Equipment	Price EUR
FS1100-MBR-H1T1-DR	0-100% r.H., 0-80 g/m³, 0-80 g/kg, -20...+80°C DP	-20...+80°C	Modbus RTU	Display, Relay	264,18
FS1100-MBR-H1T1-R	0-100% r.H., 0-80 g/m³, 0-80 g/kg, -20...+80°C DP	-20...+80°C	Modbus RTU	Relay	213,18
FS1100-MBR-H1T1-X	0-100% r.H., 0-80 g/m³, 0-80 g/kg, -20...+80°C DP	-20...+80°C	Modbus RTU	-	192,78

FS1101

Article No. (CG 4)	Humidity	Temperature	Output	Equipment	Price EUR
FS1101-MBR-H1T1-D	0-100% r.H., 0-80 g/m³, 0-80 g/kg, -20...+80°C DP	-20...+80°C	Modbus RTU	Display	362,26
FS1101-MBR-H1T1-DR	0-100% r.H., 0-80 g/m³, 0-80 g/kg, -20...+80°C DP	-20...+80°C	Modbus RTU	Display, Relay	382,66
FS1101-MBR-H1T1-R	0-100% r.H., 0-80 g/m³, 0-80 g/kg, -20...+80°C DP	-20...+80°C	Modbus RTU	Relay	331,66
FS1101-MBR-H1T1-X	0-100% r.H., 0-80 g/m³, 0-80 g/kg, -20...+80°C DP	-20...+80°C	Modbus RTU	-	311,26

FS1120

Article No. (CG 4)	Humidity	Temperature	Output	Equipment	Price EUR
FS1120-MBR-H1T1-D	0-100% r.H., 0-80 g/m³, 0-80 g/kg, -20...+80°C DP	-20...+80°C	Modbus RTU	Display	243,78
FS1120-MBR-H1T1-DR	0-100% r.H., 0-80 g/m³, 0-80 g/kg, -20...+80°C DP	-20...+80°C	Modbus RTU	Display, Relay	264,18
FS1120-MBR-H1T1-R	0-100% r.H., 0-80 g/m³, 0-80 g/kg, -20...+80°C DP	-20...+80°C	Modbus RTU	Relay	213,18
FS1120-MBR-H1T1-X	0-100% r.H., 0-80 g/m³, 0-80 g/kg, -20...+80°C DP	-20...+80°C	Modbus RTU	-	192,78

FS1121

Article No. (CG 4)	Humidity	Temperature	Output	Equipment	Price EUR
FS1121-MBR-H1T1-D	0-100% r.H., 0-80 g/m³, 0-80 g/kg, -20...+80°C DP	-20...+80°C	Modbus RTU	Display	362,26
FS1121-MBR-H1T1-DR	0-100% r.H., 0-80 g/m³, 0-80 g/kg, -20...+80°C DP	-20...+80°C	Modbus RTU	Display, Relay	382,66
FS1121-MBR-H1T1-R	0-100% r.H., 0-80 g/m³, 0-80 g/kg, -20...+80°C DP	-20...+80°C	Modbus RTU	Relay	331,66
FS1121-MBR-H1T1-X	0-100% r.H., 0-80 g/m³, 0-80 g/kg, -20...+80°C DP	-20...+80°C	Modbus RTU	-	311,26

FS1135

Article No. (CG 4)	Humidity	Temperature	Output	Equipment	Price EUR
FS1135-MBR-H1T1-D	0-100% r.H., 0-80 g/m³, 0-80 g/kg, -20...+80°C DP	-20...+80°C	Modbus RTU	Display	502,56
FS1135-MBR-H1T1-DR	0-100% r.H., 0-80 g/m³, 0-80 g/kg, -20...+80°C DP	-20...+80°C	Modbus RTU	Display, Relay	592,63
FS1135-MBR-H1T1-R	0-100% r.H., 0-80 g/m³, 0-80 g/kg, -20...+80°C DP	-20...+80°C	Modbus RTU	Relay	499,81
FS1135-MBR-H1T1-X	0-100% r.H., 0-80 g/m³, 0-80 g/kg, -20...+80°C DP	-20...+80°C	Modbus RTU	-	468,19

FS1140

Article No. (CG 4)	Humidity	Temperature	Output	Equipment	Price EUR
FS1140-MBR-H1T1-D	0-100% r.H., 0-80 g/m³, 0-80 g/kg, -20...+80°C DP	-20...+80°C	Modbus RTU	Display	259,17
FS1140-MBR-H1T1-DR	0-100% r.H., 0-80 g/m³, 0-80 g/kg, -20...+80°C DP	-20...+80°C	Modbus RTU	Display, Relay	279,57
FS1140-MBR-H1T1-R	0-100% r.H., 0-80 g/m³, 0-80 g/kg, -20...+80°C DP	-20...+80°C	Modbus RTU	Relay	228,57

Article No. (CG 4)	Humidity	Temperature	Output	Equipment	Price EUR
FS1140-MBR-H1T1-X	0-100% r.H., 0-80 g/m³, 0-80 g/kg, -20...+80°C DP	-20...+80°C	Modbus RTU	-	208,17

FS1141

Article No. (CG 4)	Humidity	Temperature	Output	Equipment	Price EUR
FS1141-MBR-H1T1-D	0-100% r.H., 0-80 g/m³, 0-80 g/kg, -20...+80°C DP	-20...+80°C	Modbus RTU	Display	259,17
FS1141-MBR-H1T1-DR	0-100% r.H., 0-80 g/m³, 0-80 g/kg, -20...+80°C DP	-20...+80°C	Modbus RTU	Display, Relay	279,57
FS1141-MBR-H1T1-R	0-100% r.H., 0-80 g/m³, 0-80 g/kg, -20...+80°C DP	-20...+80°C	Modbus RTU	Relay	228,57
FS1141-MBR-H1T1-X	0-100% r.H., 0-80 g/m³, 0-80 g/kg, -20...+80°C DP	-20...+80°C	Modbus RTU	-	208,17

FS1180

Article No. (CG 4)	Humidity	Temperature	Output	Equipment	Price EUR
FS1180-MBR-H1T1-D	0-100% r.H., 0-80 g/m³, 0-80 g/kg, -20...+80°C DP	0...+50°C	Modbus RTU	Display	210,98
FS1180-MBR-H1T1-DR	0-100% r.H., 0-80 g/m³, 0-80 g/kg, -20...+80°C DP	0...+50°C	Modbus RTU	Display, Relay	231,38
FS1180-MBR-H1T1-R	0-100% r.H., 0-80 g/m³, 0-80 g/kg, -20...+80°C DP	0...+50°C	Modbus RTU	Relay	180,38
FS1180-MBR-H1T1-X	0-100% r.H., 0-80 g/m³, 0-80 g/kg, -20...+80°C DP	0...+50°C	Modbus RTU	-	159,98

FS1200

Article No. (CG 4)	Differential pressure	Volume flow	Air pressure	Output	Equipment	Price EUR
FS1200-MBR-P21P4V1-D	-100...+100 Pa	0-30.000 m³/h	500...1150 mbar	Modbus RTU	Display	355,00
FS1200-MBR-P21P4V1-DR	-100...+100 Pa	0-30.000 m³/h	500...1150 mbar	Modbus RTU	Display, Relay	373,75
FS1200-MBR-P21P4V1-R	-100...+100 Pa	0-30.000 m³/h	500...1150 mbar	Modbus RTU	Relay	323,75
FS1200-MBR-P21P4V1-X	-100...+100 Pa	0-30.000 m³/h	500...1150 mbar	Modbus RTU	-	305,00
FS1200-MBR-P21V1-D	-100...+100 Pa	0-30.000 m³/h	-	Modbus RTU	Display	280,00
FS1200-MBR-P21V1-DR	-100...+100 Pa	0-30.000 m³/h	-	Modbus RTU	Display, Relay	298,75
FS1200-MBR-P21V1-R	-100...+100 Pa	0-30.000 m³/h	-	Modbus RTU	Relay	248,75
FS1200-MBR-P21V1-X	-100...+100 Pa	0-30.000 m³/h	-	Modbus RTU	-	230,00
FS1200-MBR-P22P4V1-D	-500...+500 Pa	0-65.000 m³/h	500...1150 mbar	Modbus RTU	Display	281,25
FS1200-MBR-P22P4V1-DR	-500...+500 Pa	0-65.000 m³/h	500...1150 mbar	Modbus RTU	Display, Relay	300,00
FS1200-MBR-P22P4V1-R	-500...+500 Pa	0-65.000 m³/h	500...1150 mbar	Modbus RTU	Relay	250,00
FS1200-MBR-P22P4V1-X	-500...+500 Pa	0-65.000 m³/h	500...1150 mbar	Modbus RTU	-	231,25
FS1200-MBR-P22V1-D	-500...+500 Pa	0-65.000 m³/h	-	Modbus RTU	Display	206,25
FS1200-MBR-P22V1-DR	-500...+500 Pa	0-65.000 m³/h	-	Modbus RTU	Display, Relay	225,00
FS1200-MBR-P22V1-R	-500...+500 Pa	0-65.000 m³/h	-	Modbus RTU	Relay	175,00
FS1200-MBR-P22V1-X	-500...+500 Pa	0-65.000 m³/h	-	Modbus RTU	-	156,25
FS1200-MBR-P23P4V1-D	-5000...+5000 Pa	0-200.000 m³/h	500...1150 mbar	Modbus RTU	Display	281,25
FS1200-MBR-P23P4V1-DR	-5000...+5000 Pa	0-200.000 m³/h	500...1150 mbar	Modbus RTU	Display, Relay	300,00
FS1200-MBR-P23P4V1-R	-5000...+5000 Pa	0-200.000 m³/h	500...1150 mbar	Modbus RTU	Relay	250,00
FS1200-MBR-P23P4V1-X	-5000...+5000 Pa	0-200.000 m³/h	500...1150 mbar	Modbus RTU	-	231,25
FS1200-MBR-P23V1-D	-5000...+5000 Pa	0-200.000 m³/h	-	Modbus RTU	Display	206,25
FS1200-MBR-P23V1-DR	-5000...+5000 Pa	0-200.000 m³/h	-	Modbus RTU	Display, Relay	225,00
FS1200-MBR-P23V1-R	-5000...+5000 Pa	0-200.000 m³/h	-	Modbus RTU	Relay	175,00
FS1200-MBR-P23V1-X	-5000...+5000 Pa	0-200.000 m³/h	-	Modbus RTU	-	156,25

FS1205

Article No. (CG 4)	Air pressure	Output	Equipment	Price EUR
FS1205-MBR-P4-D	500...1150 mbar	Modbus RTU	Display	227,72
FS1205-MBR-P4-DR	500...1150 mbar	Modbus RTU	Display, Relay	248,12
FS1205-MBR-P4-R	500...1150 mbar	Modbus RTU	Relay	197,12
FS1205-MBR-P4-X	500...1150 mbar	Modbus RTU	-	176,72

FS1300

Article No. (CG 4)	CO2	VOC	Humidity	Temperature	Output	Equipment	Price EUR
FS1300-MBR-A2-D	0-10000 ppm	-	-	-	Modbus RTU	Display	362,26
FS1300-MBR-A2-DR	0-10000 ppm	-	-	-	Modbus RTU	Display, Relay	382,66
FS1300-MBR-A2-R	0-10000 ppm	-	-	-	Modbus RTU	Relay	331,66
FS1300-MBR-A2-X	0-10000 ppm	-	-	-	Modbus RTU	-	311,26
FS1300-MBR-A2A4-D	0-10000 ppm	0-100%	-	-	Modbus RTU	Display	437,90
FS1300-MBR-A2A4-DR	0-10000 ppm	0-100%	-	-	Modbus RTU	Display, Relay	458,30
FS1300-MBR-A2A4-R	0-10000 ppm	0-100%	-	-	Modbus RTU	Relay	407,30
FS1300-MBR-A2A4-X	0-10000 ppm	0-100%	-	-	Modbus RTU	-	386,90
FS1300-MBR-A2A4H1T1-D	0-10000 ppm	0-100%	0-100% r.H.	-30...+100°C	Modbus RTU	Display	545,00
FS1300-MBR-A2A4H1T1-DR	0-10000 ppm	0-100%	0-100% r.H.	-30...+100°C	Modbus RTU	Display, Relay	565,40
FS1300-MBR-A2A4H1T1-R	0-10000 ppm	0-100%	0-100% r.H.	-30...+100°C	Modbus RTU	Relay	514,40
FS1300-MBR-A2A4H1T1-X	0-10000 ppm	0-100%	0-100% r.H.	-30...+100°C	Modbus RTU	-	494,00
FS1300-MBR-A2H1T1-D	0-10000 ppm	-	0-100% r.H.	-30...+100°C	Modbus RTU	Display	437,90
FS1300-MBR-A2H1T1-DR	0-10000 ppm	-	0-100% r.H.	-30...+100°C	Modbus RTU	Display, Relay	458,30
FS1300-MBR-A2H1T1-R	0-10000 ppm	-	0-100% r.H.	-30...+100°C	Modbus RTU	Relay	407,30

continued on next page

Article No. (CG 4)	CO2	VOC	Humidity	Temperature	Output	Equipment	Price EUR
FS1300-MBR-A2H1T1-X	0-10000 ppm	-	0-100% r.H.	-30...+100°C	Modbus RTU	-	386,90
FS1300-MBR-A4-D	-	0-100%	-	-	Modbus RTU	Display	275,24
FS1300-MBR-A4-DR	-	0-100%	-	-	Modbus RTU	Display, Relay	295,64
FS1300-MBR-A4-R	-	0-100%	-	-	Modbus RTU	Relay	244,64
FS1300-MBR-A4-X	-	0-100%	-	-	Modbus RTU	-	224,24
FS1300-MBR-A4H1T1-D	-	0-100%	0-100% r.H.	-30...+100°C	Modbus RTU	Display	382,34
FS1300-MBR-A4H1T1-DR	-	0-100%	0-100% r.H.	-30...+100°C	Modbus RTU	Display, Relay	402,74
FS1300-MBR-A4H1T1-R	-	0-100%	0-100% r.H.	-30...+100°C	Modbus RTU	Relay	351,74
FS1300-MBR-A4H1T1-X	-	0-100%	0-100% r.H.	-30...+100°C	Modbus RTU	-	331,34

FS1301

Article No. (CG 4)	CO	VOC	Humidity	Temperature	Output	Equipment	Price EUR
FS1301-MBR-A1-D	0-1000 ppm	-	-	-	Modbus RTU	Display	264,53
FS1301-MBR-A1-DR	0-1000 ppm	-	-	-	Modbus RTU	Display, Relay	284,93
FS1301-MBR-A1-R	0-1000 ppm	-	-	-	Modbus RTU	Relay	233,93
FS1301-MBR-A1-X	0-1000 ppm	-	-	-	Modbus RTU	-	213,53
FS1301-MBR-A1A4-D	0-1000 ppm	0-100%	-	-	Modbus RTU	Display	411,12
FS1301-MBR-A1A4-DR	0-1000 ppm	0-100%	-	-	Modbus RTU	Display, Relay	431,52
FS1301-MBR-A1A4-R	0-1000 ppm	0-100%	-	-	Modbus RTU	Relay	380,52
FS1301-MBR-A1A4-X	0-1000 ppm	0-100%	-	-	Modbus RTU	-	360,12
FS1301-MBR-A1A4H1T1-D	0-1000 ppm	0-100%	0-100% r.H.	-30...+100°C	Modbus RTU	Display	518,22
FS1301-MBR-A1A4H1T1-DR	0-1000 ppm	0-100%	0-100% r.H.	-30...+100°C	Modbus RTU	Display, Relay	538,62
FS1301-MBR-A1A4H1T1-R	0-1000 ppm	0-100%	0-100% r.H.	-30...+100°C	Modbus RTU	Relay	487,62
FS1301-MBR-A1A4H1T1-X	0-1000 ppm	0-100%	0-100% r.H.	-30...+100°C	Modbus RTU	-	467,22

Article No. (CG 4)	CO	VOC	Humidity	Temperature	Output	Equipment	Price EUR
FS1301-MBR-A1H1T1-D	0-1000 ppm	-	0-100% r.H.	-30...+100°C	Modbus RTU	Display	411,12
FS1301-MBR-A1H1T1-DR	0-1000 ppm	-	0-100% r.H.	-30...+100°C	Modbus RTU	Display, Relay	431,52
FS1301-MBR-A1H1T1-R	0-1000 ppm	-	0-100% r.H.	-30...+100°C	Modbus RTU	Relay	380,52
FS1301-MBR-A1H1T1-X	0-1000 ppm	-	0-100% r.H.	-30...+100°C	Modbus RTU	-	360,12

FS1308

Article No. (CG 4)	Measurement range PM2.5/PM10	Output	Equipment	Price EUR
FS1308-A51-D	0 µg/m³ ... 1000 µg/m³	Modbus RTU	Display	497,50
FS1308-A51-DR	0 µg/m³ ... 1000 µg/m³	Modbus RTU	Display, Relay	512,50
FS1308-A51-R	0 µg/m³ ... 1000 µg/m³	Modbus RTU	Relay	437,50
FS1308-A51-X	0 µg/m³ ... 1000 µg/m³	Modbus RTU	-	422,50

FS1309

Article No. (CG 4)	Measurement range O2	Output	Equipment	Price EUR
FS1309-MBR-A31-D	0...25%	Modbus RTU	Display	597,50
FS1309-MBR-A31-DR	0...25%	Modbus RTU	Display, Relay	612,50
FS1309-MBR-A31-R	0...25%	Modbus RTU	Relay	537,50
FS1309-MBR-A31-X	0...25%	Modbus RTU	-	522,50
FS1309-MBR-A32-D	0...100%	Modbus RTU	Display	597,50
FS1309-MBR-A32-DR	0...100%	Modbus RTU	Display, Relay	612,50
FS1309-MBR-A32-R	0...100%	Modbus RTU	Relay	537,50
FS1309-MBR-A32-X	0...100%	Modbus RTU	-	522,50

FS1320

Article No. (CG 4)	CO2	VOC	Humidity	Temperature	Output	Equipment	Price EUR
FS1320-MBR-A2-D	0-10000 ppm	-	-	-	Modbus RTU	Display	396,40
FS1320-MBR-A2-DR	0-10000 ppm	-	-	-	Modbus RTU	Display, Relay	416,80
FS1320-MBR-A2-R	0-10000 ppm	-	-	-	Modbus RTU	Relay	365,80
FS1320-MBR-A2-X	0-10000 ppm	-	-	-	Modbus RTU	-	345,40
FS1320-MBR-A2A4-D	0-10000 ppm	0-100%	-	-	Modbus RTU	Display	457,98
FS1320-MBR-A2A4-DR	0-10000 ppm	0-100%	-	-	Modbus RTU	Display, Relay	478,38
FS1320-MBR-A2A4-R	0-10000 ppm	0-100%	-	-	Modbus RTU	Relay	427,38
FS1320-MBR-A2A4-X	0-10000 ppm	0-100%	-	-	Modbus RTU	-	406,98
FS1320-MBR-A2A4H1T1-D	0-10000 ppm	0-100%	0-100% r.H.	-30...+100°C	Modbus RTU	Display	565,08
FS1320-MBR-A2A4H1T1-DR	0-10000 ppm	0-100%	0-100% r.H.	-30...+100°C	Modbus RTU	Display, Relay	585,48
FS1320-MBR-A2A4H1T1-R	0-10000 ppm	0-100%	0-100% r.H.	-30...+100°C	Modbus RTU	Relay	534,48
FS1320-MBR-A2A4H1T1-X	0-10000 ppm	0-100%	0-100% r.H.	-30...+100°C	Modbus RTU	-	514,08
FS1320-MBR-A2H1T1-D	0-10000 ppm	-	0-100% r.H.	-30...+100°C	Modbus RTU	Display	457,98
FS1320-MBR-A2H1T1-DR	0-10000 ppm	-	0-100% r.H.	-30...+100°C	Modbus RTU	Display, Relay	478,38
FS1320-MBR-A2H1T1-R	0-10000 ppm	-	0-100% r.H.	-30...+100°C	Modbus RTU	Relay	427,38
FS1320-MBR-A2H1T1-X	0-10000 ppm	-	0-100% r.H.	-30...+100°C	Modbus RTU	-	406,98
FS1320-MBR-A4-D	-	0-100%	-	-	Modbus RTU	Display	297,33
FS1320-MBR-A4-DR	-	0-100%	-	-	Modbus RTU	Display, Relay	317,73
FS1320-MBR-A4-R	-	0-100%	-	-	Modbus RTU	Relay	266,73
FS1320-MBR-A4-X	-	0-100%	-	-	Modbus RTU	-	246,33
FS1320-MBR-A4H1T1-D	-	0-100%	0-100% r.H.	-30...+100°C	Modbus RTU	Display	404,43
FS1320-MBR-A4H1T1-DR	-	0-100%	0-100% r.H.	-30...+100°C	Modbus RTU	Display, Relay	424,83
FS1320-MBR-A4H1T1-R	-	0-100%	0-100% r.H.	-30...+100°C	Modbus RTU	Relay	373,83
FS1320-MBR-A4H1T1-X	-	0-100%	0-100% r.H.	-30...+100°C	Modbus RTU	-	353,43

FS1321

Article No. (CG 4)	CO	VOC	Humidity	Temperature	Output	Equipment	Price EUR
FS1321-MBR-A1-D	0-1000 ppm	-	-	-	Modbus RTU	Display	289,30
FS1321-MBR-A1-DR	0-1000 ppm	-	-	-	Modbus RTU	Display, Relay	309,70
FS1321-MBR-A1-R	0-1000 ppm	-	-	-	Modbus RTU	Relay	258,70
FS1321-MBR-A1-X	0-1000 ppm	-	-	-	Modbus RTU	-	238,30
FS1321-MBR-A1A4-D	0-1000 ppm	0-100%	-	-	Modbus RTU	Display	431,21
FS1321-MBR-A1A4-DR	0-1000 ppm	0-100%	-	-	Modbus RTU	Display, Relay	451,61
FS1321-MBR-A1A4-R	0-1000 ppm	0-100%	-	-	Modbus RTU	Relay	400,61
FS1321-MBR-A1A4-X	0-1000 ppm	0-100%	-	-	Modbus RTU	-	380,21
FS1321-MBR-A1A4H1T1-D	0-1000 ppm	0-100%	0-100% r.H.	-30...+100°C	Modbus RTU	Display	538,31
FS1321-MBR-A1A4H1T1-DR	0-1000 ppm	0-100%	0-100% r.H.	-30...+100°C	Modbus RTU	Display, Relay	558,71
FS1321-MBR-A1A4H1T1-R	0-1000 ppm	0-100%	0-100% r.H.	-30...+100°C	Modbus RTU	Relay	507,71
FS1321-MBR-A1A4H1T1-X	0-1000 ppm	0-100%	0-100% r.H.	-30...+100°C	Modbus RTU	-	487,31
FS1321-MBR-A1H1T1-D	0-1000 ppm	-	0-100% r.H.	-30...+100°C	Modbus RTU	Display	504,84
FS1321-MBR-A1H1T1-DR	0-1000 ppm	-	0-100% r.H.	-30...+100°C	Modbus RTU	Display, Relay	525,24
FS1321-MBR-A1H1T1-R	0-1000 ppm	-	0-100% r.H.	-30...+100°C	Modbus RTU	Relay	474,24
FS1321-MBR-A1H1T1-X	0-1000 ppm	-	0-100% r.H.	-30...+100°C	Modbus RTU	-	453,84

FS1380

Article No. (CG 4)	CO2	VOC	Humidity	Temperature	Output	Equipment	Price EUR
FS1380-MBR-A2-D	0-10000 ppm	-	-	-	Modbus RTU	Display	271,23
FS1380-MBR-A2-DR	0-10000 ppm	-	-	-	Modbus RTU	Display, Relay	291,63
FS1380-MBR-A2-R	0-10000 ppm	-	-	-	Modbus RTU	Relay	240,63
FS1380-MBR-A2-X	0-10000 ppm	-	-	-	Modbus RTU	-	220,23
FS1380-MBR-A2A4-D	0-10000 ppm	0-100%	-	-	Modbus RTU	Display	383,01
FS1380-MBR-A2A4-DR	0-10000 ppm	0-100%	-	-	Modbus RTU	Display, Relay	403,41
FS1380-MBR-A2A4-R	0-10000 ppm	0-100%	-	-	Modbus RTU	Relay	352,41
FS1380-MBR-A2A4-X	0-10000 ppm	0-100%	-	-	Modbus RTU	-	332,01
FS1380-MBR-A2A4H1T1-D	0-10000 ppm	0-100%	0-100% r.H.	-30...+100°C	Modbus RTU	Display	490,11
FS1380-MBR-A2A4H1T1-DR	0-10000 ppm	0-100%	0-100% r.H.	-30...+100°C	Modbus RTU	Display, Relay	510,51
FS1380-MBR-A2A4H1T1-R	0-10000 ppm	0-100%	0-100% r.H.	-30...+100°C	Modbus RTU	Relay	459,51
FS1380-MBR-A2A4H1T1-X	0-10000 ppm	0-100%	0-100% r.H.	-30...+100°C	Modbus RTU	-	439,11
FS1380-MBR-A2H1T1-D	0-10000 ppm	-	0-100% r.H.	-30...+100°C	Modbus RTU	Display	383,01
FS1380-MBR-A2H1T1-DR	0-10000 ppm	-	0-100% r.H.	-30...+100°C	Modbus RTU	Display, Relay	403,41
FS1380-MBR-A2H1T1-R	0-10000 ppm	-	0-100% r.H.	-30...+100°C	Modbus RTU	Relay	352,41
FS1380-MBR-A2H1T1-X	0-10000 ppm	-	0-100% r.H.	-30...+100°C	Modbus RTU	-	332,01
FS1380-MBR-A4-D	-	0-100%	-	-	Modbus RTU	Display	227,72
FS1380-MBR-A4-DR	-	0-100%	-	-	Modbus RTU	Display, Relay	248,12
FS1380-MBR-A4-R	-	0-100%	-	-	Modbus RTU	Relay	197,12
FS1380-MBR-A4-X	-	0-100%	-	-	Modbus RTU	-	176,72
FS1380-MBR-A4H1T1-D	-	0-100%	0-100% r.H.	-30...+100°C	Modbus RTU	Display	334,82
FS1380-MBR-A4H1T1-DR	-	0-100%	0-100% r.H.	-30...+100°C	Modbus RTU	Display, Relay	355,22
FS1380-MBR-A4H1T1-R	-	0-100%	0-100% r.H.	-30...+100°C	Modbus RTU	Relay	304,22
FS1380-MBR-A4H1T1-X	-	0-100%	0-100% r.H.	-30...+100°C	Modbus RTU	-	283,82

FS1381

Article No. (CG 4)	CO	VOC	Humidity	Temperature	Output	Equipment	Price EUR
FS1381-MBR-A1-D	0-1000 ppm	-	-	-	Modbus RTU	Display	218,34
FS1381-MBR-A1-DR	0-1000 ppm	-	-	-	Modbus RTU	Display, Relay	238,74
FS1381-MBR-A1-R	0-1000 ppm	-	-	-	Modbus RTU	Relay	187,74
FS1381-MBR-A1-X	0-1000 ppm	-	-	-	Modbus RTU	-	167,34
FS1381-MBR-A1A4-D	0-1000 ppm	0-100%	-	-	Modbus RTU	Display	356,24
FS1381-MBR-A1A4-DR	0-1000 ppm	0-100%	-	-	Modbus RTU	Display, Relay	376,64
FS1381-MBR-A1A4-R	0-1000 ppm	0-100%	-	-	Modbus RTU	Relay	325,64
FS1381-MBR-A1A4-X	0-1000 ppm	0-100%	-	-	Modbus RTU	-	305,24
FS1381-MBR-A1A4H1T1-D	0-1000 ppm	0-100%	0-100% r.H.	-30...+100°C	Modbus RTU	Display	463,34
FS1381-MBR-A1A4H1T1-DR	0-1000 ppm	0-100%	0-100% r.H.	-30...+100°C	Modbus RTU	Display, Relay	483,74
FS1381-MBR-A1A4H1T1-R	0-1000 ppm	0-100%	0-100% r.H.	-30...+100°C	Modbus RTU	Relay	432,74
FS1381-MBR-A1A4H1T1-X	0-1000 ppm	0-100%	0-100% r.H.	-30...+100°C	Modbus RTU	-	412,34
FS1381-MBR-A1H1T1-D	0-1000 ppm	-	0-100% r.H.	-30...+100°C	Modbus RTU	Display	356,24
FS1381-MBR-A1H1T1-DR	0-1000 ppm	-	0-100% r.H.	-30...+100°C	Modbus RTU	Display, Relay	376,64
FS1381-MBR-A1H1T1-R	0-1000 ppm	-	0-100% r.H.	-30...+100°C	Modbus RTU	Relay	325,64
FS1381-MBR-A1H1T1-X	0-1000 ppm	-	0-100% r.H.	-30...+100°C	Modbus RTU	-	305,24

FS1420

Article No. (CG 4)	Flow	Volume flow	Temperature	Output	Equipment	Price EUR
FS1420-MBR-F1-D	0-5 m/s	-	-	Modbus RTU	Display	273,24
FS1420-MBR-F1-DR	0-5 m/s	-	-	Modbus RTU	Display, Relay	293,64
FS1420-MBR-F1-R	0-5 m/s	-	-	Modbus RTU	Relay	242,64
FS1420-MBR-F1-X	0-5 m/s	-	-	Modbus RTU	-	222,24
FS1420-MBR-F1T1-D	0-5 m/s	-	0...+50°C	Modbus RTU	Display	291,98
FS1420-MBR-F1T1-DR	0-5 m/s	-	0...+50°C	Modbus RTU	Display, Relay	312,38
FS1420-MBR-F1T1-R	0-5 m/s	-	0...+50°C	Modbus RTU	Relay	261,38
FS1420-MBR-F1T1-X	0-5 m/s	-	0...+50°C	Modbus RTU	-	240,98
FS1420-MBR-F1T1V1-D	0-5 m/s	0-65.000 m^3/h	0...+50°C	Modbus RTU	Display	318,75
FS1420-MBR-F1T1V1-DR	0-5 m/s	0-65.000 m^3/h	0...+50°C	Modbus RTU	Display, Relay	339,15
FS1420-MBR-F1T1V1-R	0-5 m/s	0-65.000 m^3/h	0...+50°C	Modbus RTU	Relay	288,15
FS1420-MBR-F1T1V1-X	0-5 m/s	0-65.000 m^3/h	0...+50°C	Modbus RTU	-	267,75
FS1420-MBR-F1V1-D	0-5 m/s	0-65.000 m^3/h	-	Modbus RTU	Display	300,01
FS1420-MBR-F1V1-DR	0-5 m/s	0-65.000 m^3/h	-	Modbus RTU	Display, Relay	320,41
FS1420-MBR-F1V1-R	0-5 m/s	0-65.000 m^3/h	-	Modbus RTU	Relay	269,41
FS1420-MBR-F1V1-X	0-5 m/s	0-65.000 m^3/h	-	Modbus RTU	-	249,01

FS1421

Article No. (CG 4)	Flow	Volume flow	Temperature	Output	Equipment	Price EUR
FS1421-MBR-F1-D	0-20 m/s	-	-	Modbus RTU	Display	273,24
FS1421-MBR-F1-DR	0-20 m/s	-	-	Modbus RTU	Display, Relay	293,64
FS1421-MBR-F1-R	0-20 m/s	-	-	Modbus RTU	Relay	242,64
FS1421-MBR-F1-X	0-20 m/s	-	-	Modbus RTU	-	222,24
FS1421-MBR-F1T1-D	0-20 m/s	-	0...+50°C	Modbus RTU	Display	291,98

Article No. (CG 4)	Flow	Volume flow	Temperature	Output	Equipment	Price EUR
FS1421-MBR-F1T1-DR	0-20 m/s	-	0...+50°C	Modbus RTU	Display, Relay	312,38
FS1421-MBR-F1T1-R	0-20 m/s	-	0...+50°C	Modbus RTU	Relay	261,38
FS1421-MBR-F1T1-X	0-20 m/s	-	0...+50°C	Modbus RTU	-	240,98
FS1421-MBR-F1T1V1-D	0-20 m/s	0-200.000 m^3/h	0...+50°C	Modbus RTU	Display	318,75
FS1421-MBR-F1T1V1-DR	0-20 m/s	0-200.000 m^3/h	0...+50°C	Modbus RTU	Display, Relay	339,15
FS1421-MBR-F1T1V1-R	0-20 m/s	0-200.000 m^3/h	0...+50°C	Modbus RTU	Relay	288,15
FS1421-MBR-F1T1V1-X	0-20 m/s	0-200.000 m^3/h	0...+50°C	Modbus RTU	-	267,75
FS1421-MBR-F1V1-D	0-20 m/s	0-200.000 m^3/h	-	Modbus RTU	Display	300,01
FS1421-MBR-F1V1-DR	0-20 m/s	0-200.000 m^3/h	-	Modbus RTU	Display, Relay	320,41
FS1421-MBR-F1V1-R	0-20 m/s	0-200.000 m^3/h	-	Modbus RTU	Relay	269,41
FS1421-MBR-F1V1-X	0-20 m/s	0-200.000 m^3/h	-	Modbus RTU	-	249,01

FS1500

Article No. (CG 4)	Brightness	Movement	Humidity	Temperature	Output	Equipment	Price EUR
FS1500-MBR-B1-R	0-100 kLux	-	-	-	Modbus RTU	Relay	164,31
FS1500-MBR-B1-X	0-100 kLux	-	-	-	Modbus RTU	-	143,91
FS1500-MBR-B1H1M1T1-R	0-100 kLux	yes/no	0-100% r.H.	-30...+100°C	Modbus RTU	Relay	373,51
FS1500-MBR-B1H1M1T1-X	0-100 kLux	yes/no	0-100% r.H.	-30...+100°C	Modbus RTU	-	353,43
FS1500-MBR-B1H1T1-R	0-100 kLux	-	0-100% r.H.	-30...+100°C	Modbus RTU	Relay	271,41
FS1500-MBR-B1H1T1-X	0-100 kLux	-	0-100% r.H.	-30...+100°C	Modbus RTU	-	251,01
FS1500-MBR-B1M1-R	0-100 kLux	yes/no	-	-	Modbus RTU	Relay	266,73
FS1500-MBR-B1M1-X	0-100 kLux	yes/no	-	-	Modbus RTU	-	246,33
FS1500-MBR-H1M1T1-R	-	yes/no	0-100% r.H.	-30...+100°C	Modbus RTU	Relay	265,39
FS1500-MBR-H1M1T1-X	-	yes/no	0-100% r.H.	-30...+100°C	Modbus RTU	-	244,99

continued on next page

Article No. (CG 4)	Brightness	Movement	Humidity	Temperature	Output	Equipment	Price EUR
FS1500-MBR-M1-R	-	yes/no	-	-	Modbus RTU	Relay	158,29
FS1500-MBR-M1-X	-	yes/no	-	-	Modbus RTU	-	137,89

FS1540

Article No. (CG 4)	Brightness	Movement	Output	Equipment	Price EUR
FS1540-MBR-B1-D	0-100 kLux	-	Modbus RTU	Display	255,83
FS1540-MBR-B1-DR	0-100 kLux	-	Modbus RTU	Display, Relay	276,23
FS1540-MBR-B1-R	0-100 kLux	-	Modbus RTU	Relay	225,23
FS1540-MBR-B1-X	0-100 kLux	-	Modbus RTU	-	204,83
FS1540-MBR-M1-D	-	yes/no	Modbus RTU	Display	269,22
FS1540-MBR-M1-DR	-	yes/no	Modbus RTU	Display, Relay	289,62
FS1540-MBR-M1-R	-	yes/no	Modbus RTU	Relay	238,62
FS1540-MBR-M1-X	-	yes/no	Modbus RTU	-	218,22

FS1580

Article No. (CG 4)	Brightness	Movement	Humidity	Temperature	Output	Equipment	Price EUR
FS1580-MBR-B1-R	0-100 kLux	-	-	-	Modbus RTU	Relay	154,28
FS1580-MBR-B1-X	0-100 kLux	-	-	-	Modbus RTU	-	133,88
FS1580-MBR-B1H1M1T1-R	0-100 kLux	yes/no	0-100% r.H.	-30...+100°C	Modbus RTU	Relay	300,90
FS1580-MBR-B1H1M1T1-X	0-100 kLux	yes/no	0-100% r.H.	-30...+100°C	Modbus RTU	-	280,50
FS1580-MBR-B1H1T1-R	0-100 kLux	-	0-100% r.H.	-30...+100°C	Modbus RTU	Relay	265,39
FS1580-MBR-B1H1T1-X	0-100 kLux	-	0-100% r.H.	-30...+100°C	Modbus RTU	-	244,99
FS1580-MBR-H1M1T1-R	-	yes/no	0-100% r.H.	-30...+100°C	Modbus RTU	Relay	265,39

Article No. (CG 4)	Brightness	Movement	Humidity	Temperature	Output	Equipment	Price EUR
FS1580-MBR-H1M1T1-X	-	yes/no	0-100% r.H.	-30...+100°C	Modbus RTU	-	244,99
FS1580-MBR-M1-R	-	yes/no	-	-	Modbus RTU	Relay	158,29
FS1580-MBR-M1-X	-	yes/no	-	-	Modbus RTU	-	137,89

FS1701

Article No. (CG 3)	Input	Output	Price EUR
FS1701-MBR-8I	8 x 4-20 mA	Modbus RTU	299,00
FS1701-MBR-8U	8 x 0-10 V	Modbus RTU	299,00

FS1702

Article No. (CG 3)	Input	Output	Price EUR
FS1702-I-MBR	Modbus RTU	8 x 4-20 mA	299,00
FS1702-U-MBR	Modbus RTU	8 x 0-10 V	299,00

FS1703

Article No. (CG 3)	Input	Output	Price EUR
FS1703-R-MBR	Modbus RTU	8 changer	299,00

FS1704

Article No. (CG 3)	Input	Output	Price EUR
FS1704-MBR-D	Modbus RTU	Display	299,00

FS3101

Article No. (CG 5)	Humidity	Temperature	Accuracy	Output	Equipment	Price EUR
FS3101-I-H1T1-190-D	0-100% r.H.	-20...+80°C	±3% r.h., ±0,5 K	2 x 4-20 mA	Display	245,33
FS3101-I-H1T1-190-DR	0-100% r.H.	-20...+80°C	±3% r.h., ±0,5 K	2 x 4-20 mA	Display, Relay	255,74
FS3101-I-H1T1-190-R	0-100% r.H.	-20...+80°C	±3% r.h., ±0,5 K	2 x 4-20 mA	Relay	203,72
FS3101-I-H1T1-190-X	0-100% r.H.	-20...+80°C	±3% r.h., ±0,5 K	2 x 4-20 mA	-	193,31
FS3101-U-H1T1-190-D	0-100% r.H.	-20...+80°C	±3% r.h., ±0,5 K	2 x 0-10 V	Display	245,33
FS3101-U-H1T1-190-DR	0-100% r.H.	-20...+80°C	±3% r.h., ±0,5 K	2 x 0-10 V	Display, Relay	255,74
FS3101-U-H1T1-190-R	0-100% r.H.	-20...+80°C	±3% r.h., ±0,5 K	2 x 0-10 V	Relay	203,72
FS3101-U-H1T1-190-X	0-100% r.H.	-20...+80°C	±3% r.h., ±0,5 K	2 x 0-10 V	-	193,31

FS3110

Article No. (CG 3)	Humidity	Temperature	Output	Equipment	Price EUR
FS3110-I-H1T1-D	0-100% r.H.	-20...+80°C	3 x 4-20 mA	Display	649,00
FS3110-I-H1T1-DR	0-100% r.H.	-20...+80°C	3 x 4-20 mA	Display, Relay	669,00
FS3110-I-H1T1-R	0-100% r.H.	-20...+80°C	3 x 4-20 mA	Relay	619,00
FS3110-U-H1T1-D	0-100% r.H.	-20...+80°C	3 x 0-10 V	Display	649,00
FS3110-U-H1T1-DR	0-100% r.H.	-20...+80°C	3 x 0-10 V	Display, Relay	669,00
FS3110-U-H1T1-R	0-100% r.H.	-20...+80°C	3 x 0-10 V	Relay	619,00

FS3130

Article No. (CG 3)	Humidity	Temperature	Output	Equipment	Price EUR
FS3130-I-H1T1-D	0-100% r.H.	-20...+80°C	3 x 4-20 mA	Display	649,00
FS3130-I-H1T1-DR	0-100% r.H.	-20...+80°C	3 x 4-20 mA	Display, Relay	669,00

Article No. (CG 3)	Humidity	Temperature	Output	Equipment	Price EUR
FS3130-I-H1T1-R	0-100% r.H.	-20...+80°C	3 x 4-20 mA	Relay	619,00
FS3130-U-H1T1-D	0-100% r.H.	-20...+80°C	3 x 0-10 V	Display	649,00
FS3130-U-H1T1-DR	0-100% r.H.	-20...+80°C	3 x 0-10 V	Display, Relay	669,00
FS3130-U-H1T1-R	0-100% r.H.	-20...+80°C	3 x 0-10 V	Relay	619,00

FS3135

Article No. (CG 5)	Humidity	Temperature	Output	Equipment	Price EUR
FS3135-I-H1T1-D	0-100% r.H.	-20...+80°C	2 x 4-20 mA	Display	449,00
FS3135-I-H1T1-DR	0-100% r.H.	-20...+80°C	2 x 4-20 mA	Display, Relay	469,00
FS3135-I-H1T1-R	0-100% r.H.	-20...+80°C	2 x 4-20 mA, changer	Relay	419,00
FS3135-I-H1T1-X	0-100% r.H.	-20...+80°C	2 x 4-20 mA	-	399,00
FS3135-U-H1T1-D	0-100% r.H.	-20...+80°C	2 x 0-10 V	Display	449,00
FS3135-U-H1T1-DR	0-100% r.H.	-20...+80°C	2 x 0-10 V	Display, Relay	469,00
FS3135-U-H1T1-R	0-100% r.H.	-20...+80°C	2 x 0-10 V	Relay	419,00
FS3135-U-H1T1-X	0-100% r.H.	-20...+80°C	2 x 0-10 V	-	399,00

FS3540

Article No. (CG 2)	Pressure	Cable	Output	Price EUR
FS3540-I-P3-0025-20	0...0,25 bar	20 m	4-20 mA	465,00
FS3540-I-P3-0025-5	0...0,25 bar	5 m	4-20 mA	385,00
FS3540-I-P3-0040-20	0...0,4 bar	20 m	4-20 mA	465,00
FS3540-I-P3-0040-5	0...0,4 bar	5 m	4-20 mA	395,00
FS3540-I-P3-0060-20	0...0,6 bar	20 m	4-20 mA	465,00
FS3540-I-P3-0060-5	0...0,6 bar	5 m	4-20 mA	385,00
FS3540-I-P3-0100-20	0...1 bar	20 m	4-20 mA	465,00
FS3540-I-P3-0100-5	0...1 bar	5 m	4-20 mA	385,00
FS3540-I-P3-0160-20	0...1,6 bar	20 m	4-20 mA	465,00

FS3610

Article No. (CG 2)	Differential pressure	Output	Hysteresis	Material	Price EUR
FS3610-S-P2-1501000-EPDM-R	150...1000 mbar	1 change-over contact	100 mbar	EPDM	169,90
FS3610-S-P2-1501000-NBR-R	150...1000 mbar	1 change-over contact	100 mbar	NBR	169,90
FS3610-S-P2-40200-EPDM-R	40...200 mbar	1 change-over contact	30 mbar	EPDM	169,90
FS3610-S-P2-40200-NBR-R	40...200 mbar	1 change-over contact	30 mbar	NBR	169,90

FS4309

Article No. (CG 2)	Measurement range O2	Output O2	Equipment	Price EUR
FS4309-U-A31-D	0...25%	0-10 V	Display	547,50
FS4309-U-A31-DR	0...25%	0-10 V	Display, Relay	562,50
FS4309-U-A31-R	0...25%	0-10 V	Relay	487,50
FS4309-U-A31-X	0...25%	0-10 V	-	472,50
FS4309-U-A32-D	0...100%	0-10 V	Display	547,50
FS4309-U-A32-DR	0...100%	0-10 V	Display, Relay	562,50
FS4309-U-A32-R	0...100%	0-10 V	Relay	487,50
FS4309-U-A32-X	0...100%	0-10 V	-	472,50

FS4408

Article No. (CG 2)	Measurement range PM2.5/PM10	Output PM2.5/PM10	Equipment	Price EUR
FS4408-UI-A51-D	0 µg/m³ ... 1000 µg/m³	0-10 V, 4-20 mA	Display	447,50
FS4408-UI-A51-DR	0 µg/m³ ... 1000 µg/m³	0-10 V, 4-20 mA	Display, Relay	462,50
FS4408-UI-A51-R	0 µg/m³ ... 1000 µg/m³	0-10 V, 4-20 mA	Relay	387,50
FS4408-UI-A51-X	0 µg/m³ ... 1000 µg/m³	0-10 V, 4-20 mA	-	372,50

FS5020

Article No. (CG 5)	Flow	Volume flow	Temperature	Output	Equipment	Price EUR
FS5020-I-F1-D	0-5 m/s	-	-	4-20 mA	Display	270,63
FS5020-I-F1-DR	0-5 m/s	-	-	4-20 mA	Display, Relay	291,43
FS5020-I-F1-R	0-5 m/s	-	-	4-20 mA	Relay	239,41
FS5020-I-F1-X	0-5 m/s	-	-	4-20 mA	-	218,61
FS5020-I-F1T1-D	0-5 m/s	-	0...+50°C	4-20 mA	Display	302,46
FS5020-I-F1T1-DR	0-5 m/s	-	0...+50°C	4-20 mA	Display, Relay	323,27
FS5020-I-F1T1-R	0-5 m/s	-	0...+50°C	4-20 mA	Relay	271,25
FS5020-I-F1T1-X	0-5 m/s	-	0...+50°C	4-20 mA	-	250,44
FS5020-I-F1T1V1-D	0-5 m/s	0-65.000 m^3/h	0...+50°C	4-20 mA	Display	333,67
FS5020-I-F1T1V1-DR	0-5 m/s	0-65.000 m^3/h	0...+50°C	4-20 mA	Display, Relay	354,48
FS5020-U-F1-D	0-5 m/s	-	-	0-10 V	Display	270,63
FS5020-U-F1-DR	0-5 m/s	-	-	0-10 V	Display, Relay	291,43
FS5020-U-F1-R	0-5 m/s	-	-	0-10 V	Relay	239,41
FS5020-U-F1-X	0-5 m/s	-	-	0-10 V	-	218,61
FS5020-U-F1T1-D	0-5 m/s	-	0...+50°C	0-10 V	Display	302,46
FS5020-U-F1T1-DR	0-5 m/s	-	0...+50°C	0-10 V	Display, Relay	323,27
FS5020-U-F1T1-R	0-5 m/s	-	0...+50°C	0-10 V	Relay	271,25
FS5020-U-F1T1-X	0-5 m/s	-	0...+50°C	0-10 V	-	250,44
FS5020-U-F1T1V1-D	0-5 m/s	0-65.000 m^3/h	0...+50°C	0-10 V	Display	333,67
FS5020-U-F1T1V1-DR	0-5 m/s	0-65.000 m^3/h	0...+50°C	0-10 V	Display, Relay	354,48
FS5020-X-F1-R	0-5 m/s	-	-	-	Relay	182,53

FS5021

Article No. (CG 5)	Flow	Volume flow	Temperature	Output	Equipment	Price EUR
FS5021-I-F1-D	0-20 m/s	-	-	4-20 mA	Display	270,63
FS5021-I-F1-DR	0-20 m/s	-	-	4-20 mA	Display, Relay	291,43
FS5021-I-F1-R	0-20 m/s	-	-	4-20 mA	Relay	239,41
FS5021-I-F1-X	0-20 m/s	-	-	4-20 mA	-	218,61
FS5021-I-F1T1-D	0-20 m/s	-	0...+50°C	4-20 mA	Display	302,46
FS5021-I-F1T1-DR	0-20 m/s	-	0...+50°C	4-20 mA	Display, Relay	323,27
FS5021-I-F1T1-R	0-20 m/s	-	0...+50°C	4-20 mA	Relay	271,25
FS5021-I-F1T1-X	0-20 m/s	-	0...+50°C	4-20 mA	-	250,44
FS5021-I-F1T1V1-D	0-20 m/s	0-200.000 m^3/h	0...+50°C	4-20 mA	Display	302,46
FS5021-I-F1T1V1-DR	0-20 m/s	0-200.000 m^3/h	0...+50°C	4-20 mA	Display, Relay	323,27
FS5021-U-F1-D	0-20 m/s	-	-	0-10 V	Display	270,63
FS5021-U-F1-DR	0-20 m/s	-	-	0-10 V	Display, Relay	291,43
FS5021-U-F1-R	0-20 m/s	-	-	0-10 V	Relay	239,41
FS5021-U-F1-X	0-20 m/s	-	-	0-10 V	-	218,61
FS5021-U-F1T1-D	0-20 m/s	-	0...+50°C	0-10 V	Display	302,46
FS5021-U-F1T1-DR	0-20 m/s	-	0...+50°C	0-10 V	Display, Relay	323,27
FS5021-U-F1T1-R	0-20 m/s	-	0...+50°C	0-10 V	Relay	271,25
FS5021-U-F1T1-X	0-20 m/s	-	0...+50°C	0-10 V	-	250,44
FS5021-U-F1T1V1-D	0-20 m/s	0-200.000 m^3/h	0...+50°C	0-10 V	Display	302,46
FS5021-U-F1T1V1-DR	0-20 m/s	0-200.000 m^3/h	0...+50°C	0-10 V	Display, Relay	323,27
FS5021-X-F1-R	0-20 m/s	-	-	-	Relay	182,53

FS6001

Article No. (CG 2)	Description	Output	Price EUR
FS6001-U-B1H1R1T1W2	Precipitation: yes/no, Brightness: 0-150 kLux, Twilight: 0-250 Lux, Wind speed: 1-40 m/s, Temperature: -20...+60°C, Humidity: 0-100% r.H.	0-10 V	917,95
FS6001-U-B1R1W2	Precipitation: yes/no, Brightness: 0-150 kLux, Twilight: 0-250 Lux, Wind speed: 1-40 m/s,	0-10 V	700,39

FS6002

Article No. (CG 2)	Description	Output	Equipment	Price EUR
FS6002-MBRU-A1B1H1R1T1W1W2-G	Wind: 0-60 m/s, 0-360°, Temperature: -40...+80°C, Humidity: 0-100% r.h., Air pressure: 500-1200 hPa, Brightness: 0-150 kLux, Precipitation: 0-999 mm/h	0-10 V, Modbus RTU	GPS	2.168,61
FS6002-MBRU-A1H1T1W1W2-G	Wind: 0-60 m/s, 0-360°, Temperature: -40...+80°C, Humidity: 0-100% r.h., Air pressure: 500-1200 hPa	0-10 V, Modbus RTU	GPS	1.853,99
FS6002-MBRU-B1R1W1W2-G	Wind: 0-60 m/s, 0-360°, Brightness: 0-150 kLux, Precipitation: 0-999 mm/h	0-10 V, Modbus RTU	GPS	2.053,25
FS6002-MBRU-W1W2-G	Wind: 0-60 m/s, 0-360°	0-10 V, Modbus RTU	GPS	1.195,40

FS6003

Article No. (CG 2)	Description	Output	Price EUR
FS6003-MBR-A1B1H1R1T1W1W2-G	Precipitation: yes/no, Brightness: 0-150 kLux, Twilight: 0-999 Lux, Wind speed: 1-40 m/s, Wind direction: 1-360°, Temperature: -30...+60°C, Humidity: 0-100% r.H., Global radiation: 0-1300 W/m², Air pressure: 300-1100 hPa	Modbus RTU	889,16

GSM/O

Article No. (CG 2)	Supply voltage	Global spectral sensitivity	Output global spectral sensitivity	Price EUR
GSM/O-I20	9...24 V DC	0...1300 W/m2	4-20 mA	**1.087,74**
GSM/O-U20	14...24 V DC	0...1300 W/m2	0-10 V	**1.087,74**

HE/E

Article No. (CG 1)	Sensor	Hand grip	Cable	Price EUR
HE/E-10/4P	Pt100 (DIN EN 60751 Cl. B)	PTFE	4 m silicone (2x0,22 mm^2)	**71,10**
HE/E-15/4P	Pt500 (DIN EN 60751 Cl. B)	PTFE	4 m silicone (2x0,22 mm^2)	**71,10**
HE/E-20/4P	Pt1000 (DIN EN 60751 Cl. B)	PTFE	4 m silicone (2x0,22 mm^2)	**71,10**

HE/T

Article No. (CG 1)	Thermocouple	Hand grip	Cable	Price EUR
HE/T-J/1P	type J	PTFE	1 m silicone (2x0,22 mm^2) with TC Mini-Connector	**65,79**
HE/T-J/4P	type J	PTFE	4 m silicone (2x0,22 mm^2) with TC Mini-Connector	**73,76**
HE/T-K/1P	type K	PTFE	1 m silicone (2x0,22 mm^2) with TC Mini-Connector	**65,79**
HE/T-K/4P	type K	PTFE	4 m silicone (2x0,22 mm^2) with TC Mini-Connector	**73,76**

HET/E

Article No. (CG 1)	Sensor	Hand grip	Cable	Price EUR
HET/E-10/4P	Pt100 (DIN EN 60751 Cl. B)	PTFE	4 m PTFE (2x0,22 mm^2)	**81,71**

Article No. (CG 1)	Sensor	Hand grip	Cable	Price EUR
HET/E-15/4P	Pt500 (DIN EN 60751 Cl. B)	PTFE	4 m PTFE (2x0,22 mm²)	**81,71**
HET/E-20/4P	Pt1000 (DIN EN 60751 Cl. B)	PTFE	4 m PTFE (2x0,22 mm²)	**81,71**

HFA/A

Article No. (CG 2)	Brightness (preset)	Temperature	Output brightness	Output temperature	Price EUR
HFA/A-UI	0-20 kLux	n/a	0-10 V, 4-20 mA	n/a	**90,20**
HFA/A-UI10	0-20 kLux	0...+50°C	0-10 V, 4-20 mA	Pt100 (DIN EN 60751 Cl. B)	**100,82**
HFA/A-UI20	0-20 kLux	0...+50°C	0-10 V, 4-20 mA	Pt1000 (DIN EN 60751 Cl. B)	**100,82**
HFA/A-UI30	0-20 kLux	0...+50°C	0-10 V, 4-20 mA	Ni1000 (glass passivated)	**100,82**

HFD/A

Article No. (CG 2)	Brightness (preset)	Temperature	Output brightness	Output temperature	Price EUR
HFD/A-UI	0-1 kLux	n/a	0-10 V, 4-20 mA	n/a	**108,24**

HFR/A

Article No. (CG 2)	Brightness (preset)	Temperature	Output brightness	Output temperature	Price EUR
HFR/A-I	0-1 kLux	n/a	4-20 mA	n/a	**90,20**
HFR/A-I10	0-1 kLux	0...+50°C	4-20 mA	Pt100 (DIN EN 60751 Cl. B)	**100,82**
HFR/A-I20	0-1 kLux	0...+50°C	4-20 mA	Pt1000 (DIN EN 60751 Cl. B)	**100,82**
HFR/A-I30	0-1 kLux	0...+50°C	4-20 mA	Ni1000 (glass passivated)	**100,82**
HFR/A-U	0-1 kLux	n/a	0-10 V	n/a	**90,20**
HFR/A-U10	0-1 kLux	0...+50°C	0-10 V	Pt100 (DIN EN 60751 Cl. B)	**100,82**
HFR/A-U20	0-1 kLux	0...+50°C	0-10 V	Pt1000 (DIN EN 60751 Cl. B)	**100,82**
HFR/A-U30	0-1 kLux	0...+50°C	0-10 V	Ni1000 (glass passivated)	**100,82**

KF1/E

Article No. (CG 1)	Sensor	Installation length	Price EUR
KF1/E-10/050	Pt100 (DIN EN 60751 Cl. B)	50 mm	**39,26**
KF1/E-20/050	Pt1000 (DIN EN 60751 Cl. B)	50 mm	**39,26**
KF1/E-30/050	Ni1000 (whirl-sintered)	50 mm	**41,39**
KF1/E-40/050	Ni1000TK5000 (whirl-sintered)	50 mm	**41,39**
KF1/E-60/050	LM235Z (±1%)	50 mm	**39,26**
KF1/E-70/050	NTC20k (±1%)	50 mm	**39,26**
KF1/E-80/050	NTC10k (±1%)	50 mm	**39,26**
Available in other installation lengths			**special versions see page 24**

KF2/E

Article No. (CG 1)	Sensor	Installation length	Price EUR
KF2/E-10/100	Pt100 (DIN EN 60751 Cl. B)	100 mm	**45,63**
KF2/E-20/100	Pt1000 (DIN EN 60751 Cl. B)	100 mm	**45,63**
Available in other installation lengths			**special versions see page 24**

KF3/E

Article No. (CG 1)	Sensor	Temperature	Installation length	Price EUR
KF3/E-10/100	Pt100 (DIN EN 60751 Cl. B)	-30...+180°C	100 mm	**65,79**
KF3/E-10/100H	Pt100 (DIN EN 60751 Cl. B)	-30...+600°C	100 mm	**132,65**
KF3/E-20/100	Pt1000 (DIN EN 60751 Cl. B)	-30...+180°C	100 mm	**65,79**
KF3/E-20/100H	Pt1000 (DIN EN 60751 Cl. B)	-30...+600°C	100 mm	**132,65**
Available in other installation lengths				**special versions see page 24**

KL/A

Article No. (CG 5)	Supply voltage	Output VOC	Version	Price EUR
KL/A-UI	24 V AC/DC	0-10 V, 4-20 mA	without display	**240,89**
KL/A-UID	24 V AC/DC	0-10 V, 4-20 mA	with display	**293,95**

Article No. (CG 5)	Supply voltage	Output VOC	Version	Price EUR
KL/A-UIR	24 V AC/DC	0-10 V, 4-20 mA, changer	without display	251,50
KL/A-UIRD	24 V AC/DC	0-10 V, 4-20 mA, changer	with display	304,56

KLT/A

Article No. (CG 5)	Supply voltage	Output	Version	Price EUR
KLT/A-I	24 V AC/DC	2 x 4-20 mA	without display	272,73
KLT/A-ID	24 V AC/DC	2 x 4-20 mA	with display	325,79
KLT/A-IR	24 V AC/DC	2 x 4-20 mA, changer	without display	283,35
KLT/A-IRD	24 V AC/DC	2 x 4-20 mA, changer	with display	336,41
KLT/A-U	24 V AC/DC	2 x 0-10 V	without display	272,73
KLT/A-UD	24 V AC/DC	2 x 0-10 V	with display	325,79
KLT/A-UR	24 V AC/DC	2 x 0-10 V, changer	without display	283,35
KLT/A-URD	24 V AC/DC	2 x 0-10 V, changer	with display	336,41

KM/E

Article No. (CG 5)	MR temp. preset	Output temperature	Installation length	Version	Price EUR
KM/E-I100	0...+100°C	4-20 mA	100 mm	without display	102,94
KM/E-I100-2R	0...+100°C	4-20 mA, 2 changer	100 mm	without display	124,16
KM/E-I100D	0...+100°C	4-20 mA	100 mm	with display	156,00
KM/E-I100D-2R	0...+100°C	4-20 mA, 2 changer	100 mm	with display	177,23
KM/E-U100	0...+100°C	0-10 V	100 mm	without display	102,94
KM/E-U100-2R	0...+100°C	0-10 V, 2 changer	100 mm	without display	124,16
KM/E-U100D	0...+100°C	0-10 V	100 mm	with display	156,00
KM/E-U100D-2R	0...+100°C	0-10 V, 2 changer	100 mm	with display	177,23
Available in other installation lengths					special versions see page 24

KP/E

Article No. (CG 1)	Sensor	Cable	Price EUR
KP/E-10/2	Pt100 (DIN EN 60751 Cl. B)	2 m PVC (2x0,25 mm²)	13,37
KP/E-15/2	Pt500 (DIN EN 60751 Cl. B)	2 m PVC (2x0,25 mm²)	13,37
KP/E-20/2	Pt1000 (DIN EN 60751 Cl. B)	2 m PVC (2x0,25 mm²)	13,37
KP/E-30/2	Ni1000 (whirl-sintered)	2 m PVC (2x0,25 mm²)	15,49
KP/E-40/2	Ni1000TK5000 (whirl-sintered)	2 m PVC (2x0,25 mm²)	15,49
KP/E-50/2	NTC1,8k (±1%)	2 m PVC (2x0,25 mm²)	13,37
KP/E-60/2	LM235Z (±1%)	2 m PVC (2x0,25 mm²)	13,37
KP/E-70/2	NTC20k (±1%)	2 m PVC (2x0,25 mm²)	13,37
KP/E-75/2	NTC5k (±1%)	2 m PVC (2x0,25 mm²)	13,37
KP/E-80/2	NTC10k (±1%)	2 m PVC (2x0,25 mm²)	13,37
KP/E-81/2	KTY 81-110 (±1%)	2 m PVC (2x0,25 mm²)	13,37
KP/E-82/2	KTY 81-121 (±1%)	2 m PVC (2x0,25 mm²)	13,37
KP/E-83/2	KTY 81-210 (KTY 10-6) (±1%)	2 m PVC (2x0,25 mm²)	13,37
Available in other cable lengths			special versions see page 24

KS/B-1W

Article No. (CG 1)	Sensor	Temperature	Cable	Serial number	Price EUR
KS/B-1W/2	DS18B20+ (12 Bit, ±0,5 K)	-55...+125°C	2 m silicone (3x0,25 mm²)	n/a	21,23
KS/B-1W/2-dec	DS18B20+ (12 Bit, ±0,5 K)	-55...+125°C	2 m silicone (3x0,25 mm²)	dec	23,35
KS/B-1W/2-hex	DS18B20+ (12 Bit, ±0,5 K)	-55...+125°C	2 m silicone (3x0,25 mm²)	hex	23,35
KS/B-1W/5	DS18B20+ (12 Bit, ±0,5 K)	-55...+125°C	5 m silicone (3x0,25 mm²)	n/a	26,96
KS/B-1W/5-dec	DS18B20+ (12 Bit, ±0,5 K)	-55...+125°C	5 m silicone (3x0,25 mm²)	dec	29,08
KS/B-1W/5-hex	DS18B20+ (12 Bit, ±0,5 K)	-55...+125°C	5 m silicone (3x0,25 mm²)	hex	29,08
Available in other cable lengths					special versions see page 24

KS/E

Article No. (CG 1)	Sensor	Cable	Price EUR
KS/E-10/2	Pt100 (DIN EN 60751 Cl. B)	2 m silicone (2x0,22 mm²)	17,30
KS/E-15/2	Pt500 (DIN EN 60751 Cl. B)	2 m silicone (2x0,22 mm²)	17,30

Article No. (CG 1)	Sensor	Cable	Price EUR
KS/E-20/2	Pt1000 (DIN EN 60751 Cl. B)	2 m silicone (2x0,22 mm²)	17,30
KS/E-30/2	Ni1000 (whirl-sintered)	2 m silicone (2x0,22 mm²)	19,42
KS/E-40/2	Ni1000TK5000 (whirl-sintered)	2 m silicone (2x0,22 mm²)	19,42
KS/E-60/2	LM235Z (±1%)	2 m silicone (2x0,22 mm²)	17,30
KS/E-70/2	NTC20k (±1%)	2 m silicone (2x0,22 mm²)	17,30
KS/E-75/2	NTC5k (±1%)	2 m silicone (2x0,22 mm²)	17,30
KS/E-80/2	NTC10k (±1%)	2 m silicone (2x0,22 mm²)	17,30
KS/E-81/2	KTY 81-110 (±1%)	2 m silicone (2x0,22 mm²)	17,30
KS/E-82/2	KTY 81-121 (±1%)	2 m silicone (2x0,22 mm²)	17,30
KS/E-83/2	KTY 81-210 (KTY 10-6) (±1%)	2 m silicone (2x0,22 mm²)	17,30
Available in other cable lengths			special versions see page 24

KS/T

Article No. (CG 1)	Thermocouple	Cable	Price EUR
KS/T-J/2	type J	2 m silicone	23,88
KS/T-K/2	type K	2 m silicone	23,88

KSM/E

Article No. (CG 5)	MR temp. preset	Output temperature	Cable	Version	Price EUR
KSM/E-I	0...+100°C	4-20 mA	2 m silicone (2x0,22 mm²)	without display	101,88
KSM/E-I2R	0...+100°C	4-20 mA, 2 changer	2 m silicone (2x0,22 mm²)	without display	123,10
KSM/E-I2RD	0...+100°C	4-20 mA, 2 changer	2 m silicone (2x0,22 mm²)	with display	176,16
KSM/E-ID	0...+100°C	4-20 mA	2 m silicone (2x0,22 mm²)	with display	154,94
KSM/E-U	0...+100°C	0-10 V	2 m silicone (2x0,22 mm²)	without display	101,88
KSM/E-U2R	0...+100°C	0-10 V, 2 changer	2 m silicone (2x0,22 mm²)	without display	123,10
KSM/E-U2RD	0...+100°C	0-10 V, 2 changer	2 m silicone (2x0,22 mm²)	with display	176,16
KSM/E-UD	0...+100°C	0-10 V	2 m silicone (2x0,22 mm²)	with display	154,94

KSt/E

Article No. (CG 1)	Sensor	Cable	Price EUR
KSt/E-10/2	Pt100 (DIN EN 60751 Cl. B)	2 m glass fibre/stainless steel netting	26,00
KSt/E-20/2	Pt1000 (DIN EN 60751 Cl. B)	2 m glass fibre/stainless steel netting	26,00
Available in other cable lengths			special versions see page 24

KT/E

Article No. (CG 1)	Sensor	Cable	Price EUR
KT/E-10/2	Pt100 (DIN EN 60751 Cl. B)	2 m PTFE (2x0,22 mm²)	23,35
KT/E-20/2	Pt1000 (DIN EN 60751 Cl. B)	2 m PTFE (2x0,22 mm²)	23,35
Available in other cable lengths			special versions see page 24

KTM/E

Article No. (CG 5)	MR temp. preset	Output temperature	Cable	Version	Price EUR
KTM/E-I	0...+100°C	4-20 mA	2 m PTFE (2x0,22 mm²)	without display	105,06
KTM/E-I2R	0...+100°C	4-20 mA, 2 changer	2 m PTFE (2x0,22 mm²)	without display	126,29
KTM/E-I2RD	0...+100°C	4-20 mA, 2 changer	2 m PTFE (2x0,22 mm²)	with display	179,35
KTM/E-ID	0...+100°C	4-20 mA	2 m PTFE (2x0,22 mm²)	with display	158,12
KTM/E-U	0...+100°C	0-10 V	2 m PTFE (2x0,22 mm²)	without display	105,06
KTM/E-U2R	0...+100°C	0-10 V, 2 changer	2 m PTFE (2x0,22 mm²)	without display	126,29
KTM/E-U2RD	0...+100°C	0-10 V, 2 changer	2 m PTFE (2x0,22 mm²)	with display	179,35
KTM/E-UD	0...+100°C	0-10 V	2 m PTFE (2x0,22 mm²)	with display	158,12

KV/E

Article No. (CG 1)	Clamp ring	Thread	Inside diameter	Price EUR
KV/E-10/1.5E	stainless steel	G1/2 inch	1,5 mm	19,10
KV/E-10/1.5P	PTFE	G1/2 inch	1,5 mm	19,10

Article No. (CG 1)	Clamp ring	Thread	Inside diameter	Price EUR
KV/E-10/3.0E	stainless steel	G1/2 inch	3,0 mm	18,04
KV/E-10/3.0P	PTFE	G1/2 inch	3,0 mm	18,04
KV/E-10/6.0E	stainless steel	G1/2 inch	6,0 mm	18,04
KV/E-10/6.0P	PTFE	G1/2 inch	6,0 mm	18,04
KV/E-20/1.5E	stainless steel	G1/4 inch	1,5 mm	15,92
KV/E-20/1.5P	PTFE	G1/4 inch	1,5 mm	15,92
KV/E-20/3.0E	stainless steel	G1/4 inch	3,0 mm	14,86
KV/E-20/3.0P	PTFE	G1/4 inch	3,0 mm	14,86
KV/E-20/6.0E	stainless steel	G1/4 inch	6,0 mm	14,86
KV/E-20/6.0P	PTFE	G1/4 inch	6,0 mm	14,86
KV/E-29/1.0P	PTFE	M6x1	1,0 mm	13,80
KV/E-29/1.5E	stainless steel	M6x1	1,5 mm	13,80
KV/E-29/1.5P	PTFE	M6x1	1,5 mm	13,80
KV/E-29/3.0E	stainless steel	M6x1	3,0 mm	13,80
KV/E-29/3.0P	PTFE	M6x1	3,0 mm	13,80
KV/E-30/1.0E	stainless steel	M8x1	1,0 mm	12,73
KV/E-30/1.0P	PTFE	M8x1	1,0 mm	12,73
KV/E-30/1.5E	stainless steel	M8x1	1,5 mm	12,73
KV/E-30/1.5P	PTFE	M8x1	1,5 mm	12,73
KV/E-30/3.0E	stainless steel	M8x1	3,0 mm	12,73
KV/E-30/3.0P	PTFE	M8x1	3,0 mm	12,73
KV/E-35/1.0P	PTFE	M10x1	1,0 mm	14,86
KV/E-35/1.5E	stainless steel	M10x1	1,5 mm	14,86
KV/E-35/1.5P	PTFE	M10x1	1,5 mm	14,86
KV/E-35/3.0E	stainless steel	M10x1	3,0 mm	14,86
KV/E-35/3.0P	PTFE	M10x1	3,0 mm	14,86
KV/E-35/6.0E	stainless steel	M10x1	6,0 mm	14,86
KV/E-35/6.0P	PTFE	M10x1	6,0 mm	14,86

LF1/E

Article No. (CG 1)	Sensor	Cable	Price EUR
LF1/E-10/2	Pt100 (DIN EN 60751 Cl. B)	2 m silicone (2x0,22 mm^2)	18,15
LF1/E-15/3	Pt500 (DIN EN 60751 Cl. B)	3 m silicone (2x0,22 mm^2)	19,52
LF1/E-20/2	Pt1000 (DIN EN 60751 Cl. B)	2 m silicone (2x0,22 mm^2)	18,15
LF1/E-30/2	Ni1000 (whirl-sintered)	2 m silicone (2x0,22 mm^2)	20,27
LF1/E-40/2	Ni1000TK5000 (whirl-sintered)	2 m silicone (2x0,22 mm^2)	20,27
LF1/E-60/2	LM235Z (±1%)	2 m silicone (2x0,22 mm^2)	18,15
LF1/E-70/2	NTC20k (±1%)	2 m silicone (2x0,22 mm^2)	18,15

continued on next page

Article No. (CG 1)	Sensor	Cable	Price EUR
LF1/E-80/2	NTC10k (±1%)	2 m silicone (2x0,22 mm²)	18,15
LF1/E-81/2	KTY 81-110 (±1%)	2 m silicone (2x0,22 mm²)	18,15
LF1/E-82/2	KTY 81-121 (±1%)	2 m silicone (2x0,22 mm²)	18,15
LF1/E-83/2	KTY 81-210 (KTY 10-6) (±1%)	2 m silicone (2x0,22 mm²)	18,15
Available in other cable lengths			special versions see page 24

LF2/B-1W

Article No. (CG 1)	Sensor	Temperature	Serial number	Price EUR
LF2/B-1W-01	DS18B20+ (12 Bit, ±0,5 K)	-30...+110°C	n/a	32,90
LF2/B-1W-01-dec	DS18B20+ (12 Bit, ±0,5 K)	-30...+110°C	dec	35,02
LF2/B-1W-01-hex	DS18B20+ (12 Bit, ±0,5 K)	-30...+110°C	hex	35,02

LF2/E

Article No. (CG 1)	Sensor	Price EUR
LF2/E-10	Pt100 (DIN EN 60751 Cl. B)	24,41
LF2/E-15	Pt500 (DIN EN 60751 Cl. B)	24,41
LF2/E-20	Pt1000 (DIN EN 60751 Cl. B)	24,41
LF2/E-30	Ni1000 (whirl-sintered)	26,53
LF2/E-40	Ni1000TK5000 (whirl-sintered)	26,53
LF2/E-60	LM235Z (±1%)	24,41
LF2/E-70	NTC20k (±1%)	24,41
LF2/E-80	NTC10k (±1%)	24,41
LF2/E-81	KTY 81-110 (±1%)	24,41
LF2/E-82	KTY 81-121 (±1%)	24,41
LF2/E-83	KTY 81-210 (KTY 10-6) (±1%)	24,41

LM1/E

Article No. (CG 5)	MR temp. preset	Output temperature	Cable	Version	Price EUR
LM1/E-I	0...+100°C	4-20 mA	2 m silicone (2x0,22 mm²)	without display	100,82
LM1/E-I2R	0...+100°C	4-20 mA, 2 changer	2 m silicone (2x0,22 mm²)	without display	122,04
LM1/E-I2RD	0...+100°C	4-20 mA, 2 changer	2 m silicone (2x0,22 mm²)	with display	175,10
LM1/E-ID	0...+100°C	4-20 mA	2 m silicone (2x0,22 mm²)	with display	153,88
LM1/E-U	0...+100°C	0-10 V	2 m silicone (2x0,22 mm²)	without display	100,82
LM1/E-U2R	0...+100°C	0-10 V, 2 changer	2 m silicone (2x0,22 mm²)	without display	122,04
LM1/E-U2RD	0...+100°C	0-10 V, 2 changer	2 m silicone (2x0,22 mm²)	with display	175,10
LM1/E-UD	0...+100°C	0-10 V	2 m silicone (2x0,22 mm²)	with display	153,88

LM2/E

Article No. (CG 5)	MR temp. preset	Output temperature	Version	Price EUR
LM2/E-I	0...+100°C	4-20 mA	without display	99,76
LM2/E-I2R	0...+100°C	4-20 mA, 2 changer	without display	120,98
LM2/E-I2RD	0...+100°C	4-20 mA, 2 changer	with display	174,04
LM2/E-ID	0...+100°C	4-20 mA	with display	152,82
LM2/E-U	0...+100°C	0-10 V	without display	99,76
LM2/E-U2R	0...+100°C	0-10 V, 2 changer	without display	120,98
LM2/E-U2RD	0...+100°C	0-10 V, 2 changer	with display	174,04
LM2/E-UD	0...+100°C	0-10 V	with display	152,82

LP/E

Article No. (CG 1)	Sensor	Cable	Price EUR
LP/E-10/2	Pt100 (DIN EN 60751 Cl. B)	2 m PVC (2x0,25 mm²)	21,23
LP/E-20/2	Pt1000 (DIN EN 60751 Cl. B)	2 m PVC (2x0,25 mm²)	21,23
LP/E-30/2	Ni1000 (whirl-sintered)	2 m PVC (2x0,25 mm²)	23,35
LP/E-40/2	Ni1000TK5000 (whirl-sintered)	2 m PVC (2x0,25 mm²)	23,35
LP/E-50/2	NTC1,8k (±1%)	2 m PVC (2x0,25 mm²)	21,23
LP/E-60/2	LM235Z (±1%)	2 m PVC (2x0,25 mm²)	21,23
LP/E-70/2	NTC20k (±1%)	2 m PVC (2x0,25 mm²)	21,23
LP/E-75/2	NTC5k (±1%)	2 m PVC (2x0,25 mm²)	21,23
LP/E-80/2	NTC10k (±1%)	2 m PVC (2x0,25 mm²)	21,23
LP/E-81/2	KTY 81-110 (±1%)	2 m PVC (2x0,25 mm²)	21,23
LP/E-82/2	KTY 81-121 (±1%)	2 m PVC (2x0,25 mm²)	21,23
LP/E-83/2	KTY 81-210 (KTY 10-6) (±1%)	2 m PVC (2x0,25 mm²)	21,23
Available in other cable lengths			special versions see page 24

MF/E

Article No. (CG 1)	Sensor	Temperature	Rod length	Price EUR
MF/E-10/04	Pt100 (DIN EN 60751 Cl. B)	-30...+80°C	0,4 m	106,12
MF/E-10/3	Pt100 (DIN EN 60751 Cl. B)	-30...+80°C	3 m	159,18
MF/E-10/6	Pt100 (DIN EN 60751 Cl. B)	-30...+80°C	6 m	212,24
MF/E-20/04	Pt1000 (DIN EN 60751 Cl. B)	-30...+80°C	0,4 m	106,12
MF/E-20/3	Pt1000 (DIN EN 60751 Cl. B)	-30...+80°C	3 m	159,18
MF/E-20/6	Pt1000 (DIN EN 60751 Cl. B)	-30...+80°C	6 m	212,24
MF/E-30/04	Ni1000 (whirl-sintered)	-30...+80°C	0,4 m	106,12
MF/E-30/3	Ni1000 (whirl-sintered)	-30...+80°C	3 m	159,18
MF/E-30/6	Ni1000 (whirl-sintered)	-30...+80°C	6 m	212,24

MFL/E

Article No. (CG 1)	Inside diameter	Material	Working temperature	Price EUR
MFL/E-A/16	16,2 mm	aluminium	Tmax. +600°C	7,96

Article No. (CG 1)	Inside diameter	Material	Working temperature	Price EUR
MFL/E-A/6	6,2 mm	aluminium	Tmax. +600°C	5,83
MFL/E-K/16	16,2 mm	flange: synthetic, screw: galvanised steel	Tmax. +80°C	6,36
MFL/E-K/6	6,1 mm	flange: synthetic, screw: galvanised steel	Tmax. +80°C	5,30

MJG/E

Article No. (CG 1)	Thermocouple	Sleeve diameter	Sleeve length	Price EUR
MJG/E-1.0/150-2	type J	1,0 mm	150 mm	46,17
MJG/E-1.0/250-2	type J	1,0 mm	250 mm	48,29
MJG/E-1.0/350-2	type J	1,0 mm	350 mm	50,41
MJG/E-1.0/500-2	type J	1,0 mm	500 mm	53,59
MJG/E-1.5/150-2	type J	1,5 mm	150 mm	46,17
MJG/E-1.5/250-2	type J	1,5 mm	250 mm	48,29
MJG/E-1.5/350-2	type J	1,5 mm	350 mm	50,41
MJG/E-1.5/500-2	type J	1,5 mm	500 mm	53,59
MJG/E-3.0/150-2	type J	3,0 mm	150 mm	46,17
MJG/E-3.0/250-2	type J	3,0 mm	250 mm	48,29
MJG/E-3.0/350-2	type J	3,0 mm	350 mm	50,41
MJG/E-3.0/500-2	type J	3,0 mm	500 mm	53,59
MJG/E-6.0/150-2	type J	6,0 mm	150 mm	55,71
MJG/E-6.0/250-2	type J	6,0 mm	250 mm	58,89
MJG/E-6.0/350-2	type J	6,0 mm	350 mm	62,08
MJG/E-6.0/500-2	type J	6,0 mm	500 mm	66,86

Available in other cable lengths special versions see page 24

MJP/E

Article No. (CG 1)	Thermocouple	Sleeve diameter	Sleeve length	Price EUR
MJP/E-1.0/150-2	type J	1,0 mm	150 mm	32,90
MJP/E-1.0/250-2	type J	1,0 mm	250 mm	35,02
MJP/E-1.0/350-2	type J	1,0 mm	350 mm	37,14
MJP/E-1.0/500-2	type J	1,0 mm	500 mm	40,33
MJP/E-1.5/150-2	type J	1,5 mm	150 mm	32,90
MJP/E-1.5/250-2	type J	1,5 mm	250 mm	35,02
MJP/E-1.5/350-2	type J	1,5 mm	350 mm	37,14
MJP/E-1.5/500-2	type J	1,5 mm	500 mm	40,33
MJP/E-3.0/150-2	type J	3,0 mm	150 mm	32,90
MJP/E-3.0/250-2	type J	3,0 mm	250 mm	35,02

continued on next page

Article No. (CG 1)	Thermocouple	Sleeve diameter	Sleeve length	Price EUR
MJP/E-3.0/350-2	type J	3,0 mm	350 mm	37,14
MJP/E-3.0/500-2	type J	3,0 mm	500 mm	40,33
MJP/E-6.0/150-2	type J	6,0 mm	150 mm	42,45
MJP/E-6.0/250-2	type J	6,0 mm	250 mm	45,63
MJP/E-6.0/350-2	type J	6,0 mm	350 mm	48,82
MJP/E-6.0/500-2	type J	6,0 mm	500 mm	53,59
Available in other cable lengths				special versions see page 24

MJS/E

Article No. (CG 1)	Thermocouple	Sleeve diameter	Sleeve length	Price EUR
MJS/E-1.0/150-2	type J	1,0 mm	150 mm	39,26
MJS/E-1.0/250-2	type J	1,0 mm	250 mm	41,39
MJS/E-1.0/350-2	type J	1,0 mm	350 mm	43,51
MJS/E-1.0/500-2	type J	1,0 mm	500 mm	46,70
MJS/E-1.5/150-2	type J	1,5 mm	150 mm	39,26
MJS/E-1.5/250-2	type J	1,5 mm	250 mm	41,39
MJS/E-1.5/350-2	type J	1,5 mm	350 mm	43,51
MJS/E-1.5/500-2	type J	1,5 mm	500 mm	46,70
MJS/E-3.0/150-2	type J	3,0 mm	150 mm	39,26
MJS/E-3.0/250-2	type J	3,0 mm	250 mm	41,39
MJS/E-3.0/350-2	type J	3,0 mm	350 mm	43,51
MJS/E-3.0/500-2	type J	3,0 mm	500 mm	46,70
MJS/E-6.0/150-2	type J	6,0 mm	150 mm	48,82
MJS/E-6.0/250-2	type J	6,0 mm	250 mm	52,00
MJS/E-6.0/350-2	type J	6,0 mm	350 mm	55,18
MJS/E-6.0/500-2	type J	6,0 mm	500 mm	59,96
Available in other cable lengths				special versions see page 24

MKG/E

Article No. (CG 1)	Thermocouple	Sleeve diameter	Sleeve length	Price EUR
MKG/E-1.0/150-2	type K	1,0 mm	150 mm	47,76
MKG/E-1.0/250-2	type K	1,0 mm	250 mm	49,88
MKG/E-1.0/350-2	type K	1,0 mm	350 mm	52,00
MKG/E-1.0/500-2	type K	1,0 mm	500 mm	55,18
MKG/E-1.5/150-2	type K	1,5 mm	150 mm	47,76

Article No. (CG 1)	Thermocouple	Sleeve diameter	Sleeve length	Price EUR
MKG/E-1.5/250-2	type K	1,5 mm	250 mm	49,88
MKG/E-1.5/350-2	type K	1,5 mm	350 mm	52,00
MKG/E-1.5/500-2	type K	1,5 mm	500 mm	55,18
MKG/E-3.0/150-2	type K	3,0 mm	150 mm	47,76
MKG/E-3.0/250-2	type K	3,0 mm	250 mm	49,88
MKG/E-3.0/350-2	type K	3,0 mm	350 mm	52,00
MKG/E-3.0/500-2	type K	3,0 mm	500 mm	55,18
MKG/E-6.0/150-2	type K	6,0 mm	150 mm	57,30
MKG/E-6.0/250-2	type K	6,0 mm	250 mm	60,49
MKG/E-6.0/350-2	type K	6,0 mm	350 mm	63,67
MKG/E-6.0/500-2	type K	6,0 mm	500 mm	68,45
Available in other cable lengths				special versions see page 24

MKP/E

Article No. (CG 1)	Thermocouple	Sleeve diameter	Sleeve length	Price EUR
MKP/E-1.0/150-2	type K	1,0 mm	150 mm	32,90
MKP/E-1.0/250-2	type K	1,0 mm	250 mm	35,02
MKP/E-1.0/350-2	type K	1,0 mm	350 mm	37,14
MKP/E-1.0/500-2	type K	1,0 mm	500 mm	40,33
MKP/E-1.5/150-2	type K	1,5 mm	150 mm	32,90
MKP/E-1.5/250-2	type K	1,5 mm	250 mm	35,02
MKP/E-1.5/350-2	type K	1,5 mm	350 mm	37,14
MKP/E-1.5/500-2	type K	1,5 mm	500 mm	40,33
MKP/E-3.0/150-2	type K	3,0 mm	150 mm	32,90
MKP/E-3.0/250-2	type K	3,0 mm	250 mm	35,02
MKP/E-3.0/350-2	type K	3,0 mm	350 mm	37,14
MKP/E-3.0/500-2	type K	3,0 mm	500 mm	40,33
MKP/E-6.0/150-2	type K	6,0 mm	150 mm	42,45
MKP/E-6.0/250-2	type K	6,0 mm	250 mm	45,63
MKP/E-6.0/350-2	type K	6,0 mm	350 mm	48,82
MKP/E-6.0/500-2	type K	6,0 mm	500 mm	53,59
Available in other cable lengths				special versions see page 24

MKS/E

Article No. (CG 1)	Thermocouple	Sleeve diameter	Sleeve length	Price EUR
MKS/E-1.0/150-2	type K	1,0 mm	150 mm	39,26
MKS/E-1.0/250-2	type K	1,0 mm	250 mm	41,39
MKS/E-1.0/350-2	type K	1,0 mm	350 mm	43,51

Article No. (CG 1)	Thermocouple	Sleeve diameter	Sleeve length	Price EUR
MKS/E-1.0/500-2	type K	1,0 mm	500 mm	46,70
MKS/E-1.5/150-2	type K	1,5 mm	150 mm	39,26
MKS/E-1.5/250-2	type K	1,5 mm	250 mm	41,39
MKS/E-1.5/350-2	type K	1,5 mm	350 mm	43,51
MKS/E-1.5/500-2	type K	1,5 mm	500 mm	46,70
MKS/E-3.0/150-2	type K	3,0 mm	150 mm	39,26
MKS/E-3.0/250-2	type K	3,0 mm	250 mm	41,39
MKS/E-3.0/350-2	type K	3,0 mm	350 mm	43,51
MKS/E-3.0/500-2	type K	3,0 mm	500 mm	46,70
MKS/E-6.0/150-2	type K	6,0 mm	150 mm	48,82
MKS/E-6.0/250-2	type K	6,0 mm	250 mm	52,00
MKS/E-6.0/350-2	type K	6,0 mm	350 mm	55,18
MKS/E-6.0/500-2	type K	6,0 mm	500 mm	59,96
Available in other cable lengths				special versions see page 24

MLS/E

Article No. (CG 1)	Thermocouple	Sleeve diameter	Sleeve length	Price EUR
MLS/E-1.0/150-2	type L	1,0 mm	150 mm	39,26
MLS/E-1.0/250-2	type L	1,0 mm	250 mm	41,39
MLS/E-1.0/350-2	type L	1,0 mm	350 mm	43,51
MLS/E-1.0/500-2	type L	1,0 mm	500 mm	46,70
MLS/E-1.5/150-2	type L	1,5 mm	150 mm	39,26
MLS/E-1.5/250-2	type L	1,5 mm	250 mm	41,39
MLS/E-1.5/350-2	type L	1,5 mm	350 mm	43,51
MLS/E-1.5/500-2	type L	1,5 mm	500 mm	46,70
MLS/E-3.0/150-2	type L	3,0 mm	150 mm	39,26
MLS/E-3.0/250-2	type L	3,0 mm	250 mm	41,39
MLS/E-3.0/350-2	type L	3,0 mm	350 mm	43,51
MLS/E-3.0/500-2	type L	3,0 mm	500 mm	46,70
MLS/E-6.0/150-2	type L	6,0 mm	150 mm	48,82
MLS/E-6.0/250-2	type L	6,0 mm	250 mm	52,00
MLS/E-6.0/350-2	type L	6,0 mm	350 mm	55,18
MLS/E-6.0/500-2	type L	6,0 mm	500 mm	59,96
Available in other cable lengths				special versions see page 24

MM/E

Article No. (CG 5)	MR temp. preset	Output temperature	Rod length	Version	Price EUR
MM/E-I04	0...+100°C	4-20 mA	0,4 m	without display	157,06
MM/E-I04-2R	0...+100°C	4-20 mA, 2 changer	0,4 m	without display	178,29
MM/E-I04D	0...+100°C	4-20 mA	0,4 m	with display	210,12
MM/E-I04D-2R	0...+100°C	4-20 mA, 2 changer	0,4 m	with display	231,35
MM/E-I3	0...+100°C	4-20 mA	3 m	without display	200,57
MM/E-I3-2R	0...+100°C	4-20 mA, 2 changer	3 m	without display	221,79
MM/E-I3D	0...+100°C	4-20 mA	3 m	with display	253,63
MM/E-I3D-2R	0...+100°C	4-20 mA, 2 changer	3 m	with display	274,85
MM/E-I6	0...+100°C	4-20 mA	6 m	without display	256,82
MM/E-I6-2R	0...+100°C	4-20 mA, 2 changer	6 m	without display	278,03
MM/E-I6D	0...+100°C	4-20 mA	6 m	with display	309,88
MM/E-I6D-2R	0...+100°C	4-20 mA, 2 changer	6 m	with display	331,09
MM/E-U04	0...+100°C	0-10 V	0,4 m	without display	157,06
MM/E-U04-2R	0...+100°C	0-10 V, 2 changer	0,4 m	without display	178,29
MM/E-U04D	0...+100°C	0-10 V	0,4 m	with display	210,12
MM/E-U04D-2R	0...+100°C	0-10 V, 2 changer	0,4 m	with display	231,35
MM/E-U3	0...+100°C	0-10 V	3 m	without display	200,57
MM/E-U3-2R	0...+100°C	0-10 V, 2 changer	3 m	without display	221,79
MM/E-U3D	0...+100°C	0-10 V	3 m	with display	253,63
MM/E-U3D-2R	0...+100°C	0-10 V, 2 changer	3 m	with display	274,85
MM/E-U6	0...+100°C	0-10 V	6 m	without display	256,82
MM/E-U6-2R	0...+100°C	0-10 V, 2 changer	6 m	without display	278,03
MM/E-U6D	0...+100°C	0-10 V	6 m	with display	309,88
MM/E-U6D-2R	0...+100°C	0-10 V, 2 changer	6 m	with display	331,09

MT1/T

Article No. (CG 1)	Thermocouple	Diameter	Nominal length	Price EUR
MT1/ T-K/1.5-150	type K	1,5 mm	150 mm	28,65
MT1/ T-K/1.5-250	type K	1,5 mm	250 mm	30,77
MT1/ T-K/1.5-350	type K	1,5 mm	350 mm	32,90
MT1/ T-K/1.5-500	type K	1,5 mm	500 mm	35,02
MT1/ T-K/3.0-150	type K	3 mm	150 mm	30,77
MT1/ T-K/3.0-250	type K	3 mm	250 mm	32,90

continued on next page

Article No. (CG 1)	Thermocouple	Diameter	Nominal length	Price EUR
MT1/ T-K/3.0-350	type K	3 mm	350 mm	35,02
MT1/ T-K/3.0-500	type K	3 mm	500 mm	37,14

MUB/E

Article No. (CG 3)	Supply voltage	Output temperature	Version	Price EUR
MUB/E-I/V1	15...36 V DC	4-20 mA	without display	81,71
MUB/E-I/V2	15...36 V DC	4-20 mA	without display	81,71
MUB/E-U/V1	24 V AC/DC	0-10 V	without display	81,71
MUB/E-U/V2	24 V AC/DC	0-10 V	without display	81,71

MUD/E

Article No. (CG 5)	Supply voltage	MR temp. preset	Output temperature	Version	Price EUR
MUD/E-I	10...30 V DC	0...+100°C	4-20 mA	without display	94,45
MUD/E-I2R	10...30 V DC	0...+100°C	4-20 mA, 2 changer	without display	115,67
MUD/E-I2RD	10...30 V DC	0...+100°C	4-20 mA, 2 changer	with display	168,73
MUD/E-ID	10...30 V DC	0...+100°C	4-20 mA	with display	147,51
MUD/E-U	24 V AC/DC	0...+100°C	0-10 V	without display	94,45
MUD/E-U2R	24 V AC/DC	0...+100°C	0-10 V, 2 changer	without display	115,67
MUD/E-U2RD	24 V AC/DC	0...+100°C	0-10 V, 2 changer	with display	168,73
MUD/E-UD	24 V AC/DC	0...+100°C	0-10 V	with display	147,51

MUH/E

Article No. (CG 3)	Supply voltage	MR temp. preset	Output temperature	Price EUR
MUH/E-I00	10...30 V DC	0...+250°C	4-20 mA	81,71
MUH/E-I01	10...30 V DC	0...+50°C	4-20 mA	81,71
MUH/E-I02	10...30 V DC	0...+100°C	4-20 mA	81,71

Article No. (CG 3)	Supply voltage	MR temp. preset	Output temperature	Price EUR
MUH/E-I03	10...30 V DC	0...+150°C	4-20 mA	81,71
MUH/E-I04	10...30 V DC	-50...+50°C	4-20 mA	81,71
MUH/E-I05	10...30 V DC	-30...+70°C	4-20 mA	81,71
MUH/E-I07	10...30 V DC	-30...+20°C	4-20 mA	81,71
MUH/E-I08	10...30 V DC	-20...+150°C	4-20 mA	81,71
MUH/E-I10	10...30 V DC	-20...+50°C	4-20 mA	81,71
MUH/E-I15	10...30 V DC	0...+200°C	4-20 mA	81,71
MUH/E-U00	24 V AC/DC	0...+250°C	0-10 V	81,71
MUH/E-U01	24 V AC/DC	0...+50°C	0-10 V	81,71
MUH/E-U02	24 V AC/DC	0...+100°C	0-10 V	81,71
MUH/E-U03	24 V AC/DC	0...+150°C	0-10 V	81,71
MUH/E-U04	24 V AC/DC	-50...+50°C	0-10 V	81,71
MUH/E-U05	24 V AC/DC	-30...+70°C	0-10 V	81,71
MUH/E-U07	24 V AC/DC	-30...+20°C	0-10 V	81,71
MUH/E-U08	24 V AC/DC	-20...+150°C	0-10 V	81,71
MUH/E-U10	24 V AC/DC	-20...+50°C	0-10 V	81,71
MUH/E-U15	24 V AC/DC	0...+200°C	0-10 V	81,71

MWT/E

Article No. (CG 1)	Sensor	Cable	Diameter	Installation length	Price EUR
MWT/E-10/3.0/100-2	Pt100 (DIN EN 60751 Cl. B)	2 m glass fibre/ stainless steel netting (2x0,22 mm²)	3 mm	100 mm	60,49
MWT/E-10/3.0/200-2	Pt100 (DIN EN 60751 Cl. B)	2 m glass fibre/ stainless steel netting (2x0,22 mm²)	3 mm	200 mm	63,14
MWT/E-10/3.0/300-2	Pt100 (DIN EN 60751 Cl. B)	2 m glass fibre/ stainless steel netting (2x0,22 mm²)	3 mm	300 mm	65,79
MWT/E-10/3.0/400-2	Pt100 (DIN EN 60751 Cl. B)	2 m glass fibre/ stainless steel netting (2x0,22 mm²)	3 mm	400 mm	68,45
MWT/E-10/6.0/100-2	Pt100 (DIN EN 60751 Cl. B)	2 m glass fibre/ stainless steel netting (2x0,22 mm²)	6 mm	100 mm	65,79
MWT/E-10/6.0/200-2	Pt100 (DIN EN 60751 Cl. B)	2 m glass fibre/ stainless steel netting (2x0,22 mm²)	6 mm	200 mm	69,51
MWT/E-10/6.0/300-2	Pt100 (DIN EN 60751 Cl. B)	2 m glass fibre/ stainless steel netting (2x0,22 mm²)	6 mm	300 mm	73,23
MWT/E-10/6.0/400-2	Pt100 (DIN EN 60751 Cl. B)	2 m glass fibre/ stainless steel netting (2x0,22 mm²)	6 mm	400 mm	76,94

NW/O

Article No. (CG 2)	Supply voltage	Alarm output	Cable	Price EUR
NW/O-10	11...28 V AC, 10...32 V DC	relay	3 m (5x0,14 mm²)	**238,77**

NW1/O

Article No. (CG 2)	Supply voltage	Precipitation	Output precipitation	Electrical connection	Price EUR
NW1/O-10	24 V AC/DC	precipitation status	relay	cable gland	**488,15**

OF1/E

Article No. (CG 1)	Sensor	Cable	Price EUR
OF1/E-10/2	Pt100 (DIN EN 60751 Cl. B)	2 m PVC (2x0,14 mm²)	**20,80**
OF1/E-20/2	Pt1000 (DIN EN 60751 Cl. B)	2 m PVC (2x0,14 mm²)	**20,80**
OF1/E-30/2	Ni1000 (whirl-sintered)	2 m PVC (2x0,14 mm²)	**22,92**
OF1/E-40/2	Ni1000TK5000 (whirl-sintered)	2 m PVC (2x0,14 mm²)	**22,92**
OF1/E-50/2	NTC1,8k (±1%)	2 m PVC (2x0,14 mm²)	**20,80**
OF1/E-60/2	LM235Z (±1%)	2 m PVC (2x0,14 mm²)	**20,80**
OF1/E-70/2	NTC20k (±1%)	2 m PVC (2x0,14 mm²)	**20,80**
OF1/E-80/2	NTC10k (±1%)	2 m PVC (2x0,14 mm²)	**20,80**
OF1/E-81/2	KTY 81-110 (±1%)	2 m PVC (2x0,14 mm²)	**20,80**
OF1/E-82/2	KTY 81-121 (±1%)	2 m PVC (2x0,14 mm²)	**20,80**
OF1/E-83/2	KTY 81-210 (KTY 10-6) (±1%)	2 m PVC (2x0,14 mm²)	**20,80**
Available in other cable lengths			**special versions see page 24**

OF2/E

Article No. (CG 1)	Sensor	Cable	Price EUR
OF2/E-10/2	Pt100 (DIN EN 60751 Cl. B)	2 m PVC (2x0,25 mm²)	**18,15**
OF2/E-20/2	Pt1000 (DIN EN 60751 Cl. B)	2 m PVC (2x0,25 mm²)	**18,15**
OF2/E-30/2	Ni1000 (whirl-sintered)	2 m PVC (2x0,25 mm²)	**20,27**
OF2/E-40/2	Ni1000TK5000 (whirl-sintered)	2 m PVC (2x0,25 mm²)	**20,27**
OF2/E-50/2	NTC1,8k (±1%)	2 m PVC (2x0,25 mm²)	**18,15**

Article No. (CG 1)	Sensor	Cable	Price EUR
OF2/E-60/2	LM235Z (±1%)	2 m PVC (2x0,25 mm²)	**18,15**
OF2/E-70/2	NTC20k (±1%)	2 m PVC (2x0,25 mm²)	**18,15**
OF2/E-80/2	NTC10k (±1%)	2 m PVC (2x0,25 mm²)	**18,15**
OF2/E-81/2	KTY 81-110 (±1%)	2 m PVC (2x0,25 mm²)	**18,15**
OF2/E-82/2	KTY 81-121 (±1%)	2 m PVC (2x0,25 mm²)	**18,15**
OF2/E-83/2	KTY 81-210 (KTY 10-6) (±1%)	2 m PVC (2x0,25 mm²)	**18,15**
Available in other cable lengths			**special versions see page 24**

OF3/E

Article No. (CG 1)	Sensor	Cable	Price EUR
OF3/E-10/2	Pt100 (DIN EN 60751 Cl. B)	2 m glass fibre/stainless steel netting (2x0,22 mm²)	**45,63**
OF3/E-20/2	Pt1000 (DIN EN 60751 Cl. B)	2 m glass fibre/stainless steel netting (2x0,22 mm²)	**45,63**
Available in other cable lengths			**special versions see page 24**

OF4/E

Article No. (CG 1)	Sensor	Cable	Price EUR
OF4/E-10/2	Pt100 (DIN EN 60751 Cl. B)	2 m silicone (2x0,22 mm²)	**63,67**
OF4/E-20/2	Pt1000 (DIN EN 60751 Cl. B)	2 m silicone (2x0,22 mm²)	**63,67**
Available in other cable lengths			**special versions see page 24**

OF5/E

Article No. (CG 1)	Sensor	Cable	Price EUR
OF5/E-10/2	Pt100 (DIN EN 60751 Cl. B)	2 m glass fibre/stainless steel netting (2x0,22 mm²)	**50,94**
OF5/E-20/2	Pt1000 (DIN EN 60751 Cl. B)	2 m glass fibre/stainless steel netting (2x0,22 mm²)	**50,94**
Available in other cable lengths			**special versions see page 24**

OF6/E

Article No. (CG 1)	Sensor	Cable	Price EUR
OF6/E-10/2	Pt100 (DIN EN 60751 Cl. B)	2 m silicone (2x0,22 mm²)	**50,90**
OF6/E-20/2	Pt1000 (DIN EN 60751 Kl. B)	2 m silicone (2x0,22 mm²)	**50,90**
OF6/E-30/2	Ni1000 (whirl-sintered)	2 m silicone (2x0,22 mm²)	**50,90**
OF6/E-40/2	Ni1000TK5000 (whirl-sintered)	2 m silicone (2x0,22 mm²)	**52,94**
OF6/E-50/2	NTC1,8k (±1%)	2 m silicone (2x0,22 mm²)	**50,90**
OF6/E-70/2	NTC20k (±1%)	2 m silicone (2x0,22 mm²)	**50,90**
OF6/E-80/2	NTC10k (±1%)	2 m silicone (2x0,22 mm²)	**50,90**

OF7/E

Article No. (CG 1)	Sensor	Cable	Price EUR
OF7/E-10/2	Pt100 (DIN EN 60751 Cl. B)	2 m glass fibre/stainless steel netting (2x0,22 mm²)	**61,10**
OF7/E-20/2	Pt1000 (DIN EN 60751 Kl. B)	2 m glass fibre/stainless steel netting (2x0,22 mm²)	**61,10**

OM1/E

Article No. (CG 5)	MR temp. preset	Output temperature	Cable	Version	Price EUR
OM1/E-I	0...+100°C	4-20 mA	2 m PVC (2x0,14 mm²)	without display	**105,06**
OM1/E-I2R	0...+100°C	4-20 mA, 2 changer	2 m PVC (2x0,14 mm²)	without display	**232,41**
OM1/E-I2RD	0...+100°C	4-20 mA, 2 changer	2 m PVC (2x0,14 mm²)	with display	**179,35**
OM1/E-ID	0...+100°C	4-20 mA	2 m PVC (2x0,14 mm²)	with display	**158,12**
OM1/E-U	0...+100°C	0-10 V	2 m PVC (2x0,14 mm²)	without display	**105,06**
OM1/E-U2R	0...+100°C	0-10 V, 2 changer	2 m PVC (2x0,14 mm²)	without display	**232,41**
OM1/E-U2RD	0...+100°C	0-10 V, 2 changer	2 m PVC (2x0,14 mm²)	with display	**179,35**
OM1/E-UD	0...+100°C	0-10 V	2 m PVC (2x0,14 mm²)	with display	**158,12**

OM3/E

Article No. (CG 5)	MR temp. preset	Output temperature	Cable	Version	Price EUR
OM3/E-I	0...+100°C	4-20 mA	2 m glass fibre/ stainless steel netting (2x0,22 mm²)	without display	**129,47**
OM3/E-I2R	0...+100°C	4-20 mA, 2 changer	2 m glass fibre/ stainless steel netting (2x0,22 mm²)	without display	**150,69**
OM3/E-I2RD	0...+100°C	4-20 mA, 2 changer	2 m glass fibre/ stainless steel netting (2x0,22 mm²)	with display	**203,76**
OM3/E-ID	0...+100°C	4-20 mA	2 m glass fibre/ stainless steel netting (2x0,22 mm²)	with display	**182,53**
OM3/E-U	0...+100°C	0-10 V	2 m glass fibre/ stainless steel netting (2x0,22 mm²)	without display	**129,47**
OM3/E-U2R	0...+100°C	0-10 V, 2 changer	2 m glass fibre/ stainless steel netting (2x0,22 mm²)	without display	**150,69**
OM3/E-U2RD	0...+100°C	0-10 V, 2 changer	2 m glass fibre/ stainless steel netting (2x0,22 mm²)	with display	**203,76**
OM3/E-UD	0...+100°C	0-10 V	2 m glass fibre/ stainless steel netting (2x0,22 mm²)	with display	**182,53**

OM4/E

Article No. (CG 5)	MR temp. preset	Output temperature	Cable	Version	Price EUR
OM4/E-I	0...+100°C	4-20 mA	2 m silicone (2x0,22 mm²)	without display	**150,69**
OM4/E-I2R	0...+100°C	4-20 mA, 2 changer	2 m silicone (2x0,22 mm²)	without display	**171,91**
OM4/E-I2RD	0...+100°C	4-20 mA, 2 changer	2 m silicone (2x0,22 mm²)	with display	**224,97**
OM4/E-ID	0...+100°C	4-20 mA	2 m silicone (2x0,22 mm²)	with display	**203,76**
OM4/E-U	0...+100°C	0-10 V	2 m silicone (2x0,22 mm²)	without display	**150,69**
OM4/E-U2R	0...+100°C	0-10 V, 2 changer	2 m silicone (2x0,22 mm²)	without display	**171,91**
OM4/E-U2RD	0...+100°C	0-10 V, 2 changer	2 m silicone (2x0,22 mm²)	with display	**224,97**
OM4/E-UD	0...+100°C	0-10 V	2 m silicone (2x0,22 mm²)	with display	**203,76**

RAF(H)/A

Article No. (CG 5)	Supply voltage	Humidity	Output r.H.	Version	Price EUR
RAF(H)/A-I	15...36 V DC	0-100% r.H.	4-20 mA	without display	246,20
RAF(H)/A-ID	15...36 V DC	0-100% r.H.	4-20 mA	with display	299,26
RAF(H)/A-IR	15...36 V DC	0-100% r.H.	4-20 mA, changer	without display	256,82
RAF(H)/A-IRD	15...36 V DC	0-100% r.H.	4-20 mA, changer	with display	309,88
RAF(H)/A-U	24 V AC/DC	0-100% r.H.	0-10 V	without display	246,20
RAF(H)/A-UD	24 V AC/DC	0-100% r.H.	0-10 V	with display	299,26
RAF(H)/A-UR	24 V AC/DC	0-100% r.H.	0-10 V, changer	without display	256,82
RAF(H)/A-URD	24 V AC/DC	0-100% r.H.	0-10 V, changer	with display	309,88

RAF/A

Article No. (CG 5)	Supply voltage	Humidity	Output r.H.	Version	Price EUR
RAF/A-I	15...36 V DC	0-100% r.H.	4-20 mA	without display	169,79
RAF/A-ID	15...36 V DC	0-100% r.H.	4-20 mA	with display	222,85
RAF/A-IR	15...36 V DC	0-100% r.H.	4-20 mA, changer	without display	180,41
RAF/A-IRD	15...36 V DC	0-100% r.H.	4-20 mA, changer	with display	233,47
RAF/A-U	24 V AC/DC	0-100% r.H.	0-10 V	without display	169,79
RAF/A-UD	24 V AC/DC	0-100% r.H.	0-10 V	with display	222,85
RAF/A-UR	24 V AC/DC	0-100% r.H.	0-10 V, changer	without display	180,41
RAF/A-URD	24 V AC/DC	0-100% r.H.	0-10 V, changer	with display	233,47

RAF/M

Article No. (CG 5)	Supply voltage	Output r.H.	Version	Price EUR
RAF/M-1R	24 V AC/DC	change-over contact	with display	116,73

RAFT(H)/A

Article No. (CG 5)	Humidity	Temperature	Output	Version	Price EUR
RAFT(H)/A-I	0-100% r.H.	-20...+80°C	2 x 4-20 mA	without display	**270,61**
RAFT(H)/A-ID	0-100% r.H.	-20...+80°C	2 x 4-20 mA	with display	**323,67**
RAFT(H)/A-IR	0-100% r.H.	-20...+80°C	2 x 4-20 mA, changer	without display	**281,22**
RAFT(H)/A-IRD	0-100% r.H.	-20...+80°C	2 x 4-20 mA, changer	with display	**334,28**
RAFT(H)/A-U	0-100% r.H.	-20...+80°C	2 x 0-10 V	without display	**270,61**
RAFT(H)/A-UD	0-100% r.H.	-20...+80°C	2 x 0-10 V	with display	**323,67**
RAFT(H)/A-UR	0-100% r.H.	-20...+80°C	2 x 0-10 V, changer	without display	**281,22**
RAFT(H)/A-URD	0-100% r.H.	-20...+80°C	2 x 0-10 V, changer	with display	**334,28**

RAFT/A

Article No. (CG 5)	Humidity	Temperature	Output	Equipment	Price EUR
RAFT/A-I	0-100% r.H.	-20...+80°C	2 x 4-20 mA	-	**192,08**
RAFT/A-ID	0-100% r.H.	-20...+80°C	2 x 4-20 mA	Display	**245,14**
RAFT/A-IR	0-100% r.H.	-20...+80°C	2 x 4-20 mA	Relay	**202,69**
RAFT/A-IRD	0-100% r.H.	-20...+80°C	2 x 4-20 mA	Display, Relay	**255,75**
RAFT/A-U	0-100% r.H.	-20...+80°C	2 x 0-10 V	-	**192,08**
RAFT/A-UD	0-100% r.H.	-20...+80°C	2 x 0-10 V	Display	**245,14**
RAFT/A-UR	0-100% r.H.	-20...+80°C	2 x 0-10 V	Relay	**202,69**
RAFT/A-URD	0-100% r.H.	-20...+80°C	2 x 0-10 V	Display, Relay	**255,75**

RAFTP/A

Article No. (CG 5)	Humidity	Temperature	Output r.H.	Output temperature	Version	Price EUR
RAFTP/A-I10	0-100% r.H.	-20...+80°C	4-20 mA	Pt100 (DIN EN 60751 Cl. B)	without display	**181,47**
RAFTP/A-I10D	0-100% r.H.	-20...+80°C	4-20 mA	Pt100 (DIN EN 60751 Cl. B)	with display	**234,53**
RAFTP/A-I20	0-100% r.H.	-20...+80°C	4-20 mA	Pt1000 (DIN EN 60751 Cl. B)	without display	**181,47**
RAFTP/A-I20D	0-100% r.H.	-20...+80°C	4-20 mA	Pt1000 (DIN EN 60751 Cl. B)	with display	**234,53**

continued on next page

Article No. (CG 5)	Humidity	Temperature	Output r.H.	Output temperature	Version	Price EUR
RAFTP/A-IR10	0-100% r.H.	-20...+80°C	4-20 mA, changer	Pt100 (DIN EN 60751 Cl. B)	without display	192,08
RAFTP/A-IR10D	0-100% r.H.	-20...+80°C	4-20 mA, changer	Pt100 (DIN EN 60751 Cl. B)	with display	245,14
RAFTP/A-IR20	0-100% r.H.	-20...+80°C	4-20 mA, changer	Pt1000 (DIN EN 60751 Cl. B)	without display	192,08
RAFTP/A-IR20D	0-100% r.H.	-20...+80°C	4-20 mA, changer	Pt1000 (DIN EN 60751 Cl. B)	with display	245,14
RAFTP/A-U10	0-100% r.H.	-20...+80°C	0-10 V	Pt100 (DIN EN 60751 Cl. B)	without display	181,47
RAFTP/A-U10D	0-100% r.H.	-20...+80°C	0-10 V	Pt100 (DIN EN 60751 Cl. B)	with display	234,53
RAFTP/A-U20	0-100% r.H.	-20...+80°C	0-10 V	Pt1000 (DIN EN 60751 Cl. B)	without display	181,47
RAFTP/A-U20D	0-100% r.H.	-20...+80°C	0-10 V	Pt1000 (DIN EN 60751 Cl. B)	with display	234,53
RAFTP/A-UR10	0-100% r.H.	-20...+80°C	0-10 V, changer	Pt100 (DIN EN 60751 Cl. B)	without display	192,08
RAFTP/A-UR10D	0-100% r.H.	-20...+80°C	0-10 V, changer	Pt100 (DIN EN 60751 Cl. B)	with display	245,14
RAFTP/A-UR20	0-100% r.H.	-20...+80°C	0-10 V, changer	Pt1000 (DIN EN 60751 Cl. B)	without display	192,08
RAFTP/A-UR20D	0-100% r.H.	-20...+80°C	0-10 V, changer	Pt1000 (DIN EN 60751 Cl. B)	with display	245,14

RDF/A

Article No. (CG 5)	Humidity	Output r.H.	Cable length	Version	Price EUR
RDF/A-I02	0-100% r.H.	4-20 mA	1 m	without display	191,02
RDF/A-I02D	0-100% r.H.	4-20 mA	1 m	with display	244,08
RDF/A-IR02	0-100% r.H.	4-20 mA, changer	1 m	without display	201,63
RDF/A-IR02D	0-100% r.H.	4-20 mA, changer	1 m	with display	254,69
RDF/A-U02	0-100% r.H.	0-10 V	1 m	without display	191,02
RDF/A-U02D	0-100% r.H.	0-10 V	1 m	with display	244,08
RDF/A-UR02	0-100% r.H.	0-10 V, changer	1 m	without display	201,63
RDF/A-UR02D	0-100% r.H.	0-10 V, changer	1 m	with display	254,69

RDFT/A

Article No. (CG 5)	Humidity	Temperature	Output	Version	Price EUR
RDFT/A-I02	0-100% r.H.	-20...+80°C	2 x 4-20 mA	without display	224,97
RDFT/A-I02D	0-100% r.H.	-20...+80°C	2 x 4-20 mA	with display	278,03
RDFT/A-IR02	0-100% r.H.	-20...+80°C	2 x 4-20 mA, changer	without display	235,59
RDFT/A-IR02D	0-100% r.H.	-20...+80°C	2 x 4-20 mA, changer	with display	288,65
RDFT/A-U02	0-100% r.H.	-20...+80°C	2 x 0-10 V	without display	224,97
RDFT/A-U02D	0-100% r.H.	-20...+80°C	2 x 0-10 V	with display	278,03
RDFT/A-UR02	0-100% r.H.	-20...+80°C	2 x 0-10 V, changer	without display	235,59
RDFT/A-UR02D	0-100% r.H.	-20...+80°C	2 x 0-10 V, changer	with display	288,65

RF/B-1W

Article No. (CG 1)	Sensor	Temperature	Serial number	Price EUR
RF/B-1W-01	DS18B20+ (12 Bit, ±0,5 K)	-30...+60 °C	n/a	23,35
RF/B-1W-01-dec	DS18B20+ (12 Bit, ±0,5 K)	-30...+60 °C	dec	25,47
RF/B-1W-01-hex	DS18B20+ (12 Bit, ±0,5 K)	-30...+60 °C	hex	25,47

RF/E

Article No. (CG 1)	Sensor	Price EUR
RF/E-10	Pt100 (DIN EN 60751 Cl. B)	17,51
RF/E-20	Pt1000 (DIN EN 60751 Cl. B)	17,51
RF/E-30	Ni1000 (whirl-sintered)	19,64
RF/E-40	Ni1000TK5000 (whirl-sintered)	19,64
RF/E-50	NTC1,8k (±1%)	17,51
RF/E-60	LM235Z (±1%)	17,51
RF/E-70	NTC20k (±1%)	17,51
RF/E-80	NTC10k (±1%)	17,51
RF/E-81	KTY 81-110 (±1%)	17,51
RF/E-82	KTY 81-121 (±1%)	17,51
RF/E-83	KTY 81-210 (KTY 10-6) (±1%)	17,51

RF1/R

Article No. (CG 2)	Sensor	Equipment	Price EUR
RF1/R-10	Pt100 (DIN EN 60751 Cl. B)	1 kOhm Poti (±5%)	40,33
RF1/R-20	Pt1000 (DIN EN 60751 Cl. B)	1 kOhm Poti (±5%)	40,33
RF1/R-30	Ni1000 (whirl-sintered)	1 kOhm Poti (±5%)	42,45
RF1/R-40	Ni1000TK5000 (whirl-sintered)	1 kOhm Poti (±5%)	42,45
RF1/R-50	NTC1,8k (±1%)	1 kOhm Poti (±5%)	40,33
RF1/R-60	LM235Z (±1%)	1 kOhm Poti (±5%)	40,33
RF1/R-70	NTC20k (±1%)	1 kOhm Poti (±5%)	40,33
RF1/R-80	NTC10k (±1%)	1 kOhm Poti (±5%)	40,33

RF2/R

Article No. (CG 2)	Sensor	Equipment	Price EUR
RF2/R-10	Pt100 (DIN EN 60751 Cl. B)	1 button (white), 1 LED (24 V DC, green)	41,39
RF2/R-20	Pt1000 (DIN EN 60751 Cl. B)	1 button (white), 1 LED (24 V DC, green)	41,39
RF2/R-30	Ni1000 (whirl-sintered)	1 button (white), 1 LED (24 V DC, green)	43,51
RF2/R-40	Ni1000TK5000 (whirl-sintered)	1 button (white), 1 LED (24 V DC, green)	43,51
RF2/R-50	NTC1,8k (±1%)	1 button (white), 1 LED (24 V DC, green)	41,39
RF2/R-60	LM235Z (±1%)	1 button (white), 1 LED (24 V DC, green)	41,39
RF2/R-70	NTC20k (±1%)	1 button (white), 1 LED (24 V DC, green)	41,39
RF2/R-80	NTC10k (±1%)	1 button (white), 1 LED (24 V DC, green)	41,39

RF3/R

Article No. (CG 2)	Sensor	Equipment	Price EUR
RF3/R-10	Pt100 (DIN EN 60751 Cl. B)	1 kOhm Poti (±5%), 4-ranks rotary switch (24 V DC)	47,76
RF3/R-20	Pt1000 (DIN EN 60751 Cl. B)	1 kOhm Poti (±5%), 4-ranks rotary switch (24 V DC)	47,76
RF3/R-30	Ni1000 (whirl-sintered)	1 kOhm Poti (±5%), 4-ranks rotary switch (24 V DC)	49,88
RF3/R-40	Ni1000TK5000 (whirl-sintered)	1 kOhm Poti (±5%), 4-ranks rotary switch (24 V DC)	49,88
RF3/R-50	NTC1,8k (±1%)	1 kOhm Poti (±5%), 4-ranks rotary switch (24 V DC)	47,76
RF3/R-60	LM235Z (±1%)	1 kOhm Poti (±5%), 4-ranks rotary switch (24 V DC)	47,76
RF3/R-70	NTC20k (±1%)	1 kOhm Poti (±5%), 4-ranks rotary switch (24 V DC)	47,76
RF3/R-80	NTC10k (±1%)	1 kOhm Poti (±5%), 4-ranks rotary switch (24 V DC)	47,76

RF4/R

Article No. (CG 2)	Sensor	Equipment	Price EUR
RF4/R-10	Pt100 (DIN EN 60751 Cl. B)	1 kOhm Poti (±5%), 1 button (white), 1 LED (24 V DC, green)	**58,36**
RF4/R-20	Pt1000 (DIN EN 60751 Cl. B)	1 kOhm Poti (±5%), 1 button (white), 1 LED (24 V DC, green)	**58,36**
RF4/R-30	Ni1000 (whirl-sintered)	1 kOhm Poti (±5%), 1 button (white), 1 LED (24 V DC, green)	**60,49**
RF4/R-40	Ni1000TK5000 (whirl-sintered)	1 kOhm Poti (±5%), 1 button (white), 1 LED (24 V DC, green)	**60,49**
RF4/R-50	NTC1,8k (±1%)	1 kOhm Poti (±5%), 1 button (white), 1 LED (24 V DC, green)	**58,36**
RF4/R-60	LM235Z (±1%)	1 kOhm Poti (±5%), 1 button (white), 1 LED (24 V DC, green)	**58,36**
RF4/R-70	NTC20k (±1%)	1 kOhm Poti (±5%), 1 button (white), 1 LED (24 V DC, green)	**58,36**
RF4/R-80	NTC10k (±1%)	1 kOhm Poti (±5%), 1 button (white), 1 LED (24 V DC, green)	**58,36**

RF5/R

Article No. (CG 2)	Sensor	Equipment	Price EUR
RF5/R-10	Pt100 (DIN EN 60751 Cl. B)	1 kOhm Poti (±5%), 1 button (white), 2 LED (24 V DC, green+red)	**61,55**
RF5/R-20	Pt1000 (DIN EN 60751 Kl. B)	1 kOhm Poti (±5%), 1 button (white), 2 LED (24 V DC, green+red)	**61,55**
RF5/R-30	Ni1000 (whirl-sintered)	1 kOhm Poti (±5%), 1 button (white), 2 LED (24 V DC, green+red)	**63,67**
RF5/R-40	Ni1000TK5000 (whirl-sintered)	1 kOhm Poti (±5%), 1 button (white), 2 LED (24 V DC, green+red)	**63,67**
RF5/R-50	NTC1,8k (±1%)	1 kOhm Poti (±5%), 1 button (white), 2 LED (24 V DC, green+red)	**61,55**
RF5/R-60	LM235Z (±1%)	1 kOhm Poti (±5%), 1 button (white), 2 LED (24 V DC, green+red)	**61,55**
RF5/R-70	NTC20k (±1%)	1 kOhm Poti (±5%), 1 button (white), 2 LED (24 V DC, green+red)	**61,55**
RF5/R-80	NTC10k (±1%)	1 kOhm Poti (±5%), 1 button (white), 2 LED (24 V DC, green+red)	**61,55**

RF6/R

Article No. (CG 2)	Sensor	Equipment	Price EUR
RF6/R-10	Pt100 (DIN EN 60751 Cl. B)	1 kOhm Poti (±5%), 4-ranks rotary switch (24 V DC), 4 button (white), rocker switch, 4 LED (24 V DC)	**90,20**
RF6/R-20	Pt1000 (DIN EN 60751 Cl. B)	1 kOhm Poti (±5%), 4-ranks rotary switch (24 V DC), 4 button (white), rocker switch, 4 LED (24 V DC)	**90,20**
RF6/R-30	Ni1000 (whirl-sintered)	1 kOhm Poti (±5%), 4-ranks rotary switch (24 V DC), 4 button (white), rocker switch, 4 LED (24 V DC)	**92,32**
RF6/R-40	Ni1000TK5000 (whirl-sintered)	1 kOhm Poti (±5%), 4-ranks rotary switch (24 V DC), 4 button (white), rocker switch, 4 LED (24 V DC)	**92,32**
RF6/R-50	NTC1,8k (±1%)	1 kOhm Poti (±5%), 4-ranks rotary switch (24 V DC), 4 button (white), rocker switch, 4 LED (24 V DC)	**90,20**
RF6/R-60	LM235Z (±1%)	1 kOhm Poti (±5%), 4-ranks rotary switch (24 V DC), 4 button (white), rocker switch, 4 LED (24 V DC)	**90,20**
RF6/R-70	NTC20k (±1%)	1 kOhm Poti (±5%), 4-ranks rotary switch (24 V DC), 4 button (white), rocker switch, 4 LED (24 V DC)	**90,20**
RF6/R-80	NTC10k (±1%)	1 kOhm Poti (±5%), 4-ranks rotary switch (24 V DC), 4 button (white), rocker switch, 4 LED (24 V DC)	**90,20**

RKF(H)/A

Article No. (CG 5)	Supply voltage	Humidity	Output r.H.	Version	Price EUR
RKF(H)/A-I	15...36 V DC	0-100% r.H.	4-20 mA	without display	**246,20**
RKF(H)/A-ID	15...36 V DC	0-100% r.H.	4-20 mA	with display	**299,26**
RKF(H)/A-IR	15...36 V DC	0-100% r.H.	4-20 mA, changer	without display	**256,82**
RKF(H)/A-IRD	15...36 V DC	0-100% r.H.	4-20 mA, changer	with display	**309,88**
RKF(H)/A-U	24 V AC/DC	0-100% r.H.	0-10 V	without display	**246,20**
RKF(H)/A-UD	24 V AC/DC	0-100% r.H.	0-10 V	with display	**299,26**
RKF(H)/A-UR	24 V AC/DC	0-100% r.H.	0-10 V, changer	without display	**256,82**
RKF(H)/A-URD	24 V AC/DC	0-100% r.H.	0-10 V, changer	with display	**309,88**

RKF/A

Article No. (CG 5)	Supply voltage	Humidity	Output r.H.	Version	Price EUR
RKF/A-I	15...36 V DC	0-100% r.H.	4-20 mA	without display	164,49
RKF/A-ID	15...36 V DC	0-100% r.H.	4-20 mA	with display	217,55
RKF/A-IR	15...36 V DC	0-100% r.H.	4-20 mA, changer	without display	175,10
RKF/A-IRD	15...36 V DC	0-100% r.H.	4-20 mA, changer	with display	228,16
RKF/A-U	24 V AC/DC	0-100% r.H.	0-10 V	without display	164,49
RKF/A-UD	24 V AC/DC	0-100% r.H.	0-10 V	with display	217,55
RKF/A-UR	24 V AC/DC	0-100% r.H.	0-10 V, changer	without display	175,10
RKF/A-URD	24 V AC/DC	0-100% r.H.	0-10 V, changer	with display	228,16

RKF/M

Article No. (CG 5)	Supply voltage	Output r.H.	Version	Price EUR
RKF/M-1R	24 V AC/DC	change-over contact	with display	116,73

RKFT(H)/A

Article No. (CG 5)	Humidity	Temperature	Output	Version	Price EUR
RKFT(H)/A-I	0-100% r.H.	-20...+80°C	2 x 4-20 mA	without display	254,69
RKFT(H)/A-ID	0-100% r.H.	-20...+80°C	2 x 4-20 mA	with display	307,75
RKFT(H)/A-IR	0-100% r.H.	-20...+80°C	2 x 4-20 mA, changer	without display	265,30
RKFT(H)/A-IRD	0-100% r.H.	-20...+80°C	2 x 4-20 mA, changer	with display	318,36
RKFT(H)/A-U	0-100% r.H.	-20...+80°C	2 x 0-10 V	without display	254,69
RKFT(H)/A-UD	0-100% r.H.	-20...+80°C	2 x 0-10 V	with display	307,75
RKFT(H)/A-UR	0-100% r.H.	-20...+80°C	2 x 0-10 V, changer	without display	265,30
RKFT(H)/A-URD	0-100% r.H.	-20...+80°C	2 x 0-10 V, changer	with display	318,36

RKFT/A

Article No. (CG 5)	Humidity	Temperature	Output	Version	Price EUR
RKFT/A-I	0-100% r.H.	-20...+80°C	2 x 4-20 mA	without display	170,85
RKFT/A-ID	0-100% r.H.	-20...+80°C	2 x 4-20 mA	with display	223,91
RKFT/A-IR	0-100% r.H.	-20...+80°C	2 x 4-20 mA, changer	without display	181,47
RKFT/A-IRD	0-100% r.H.	-20...+80°C	2 x 4-20 mA, changer	with display	234,53
RKFT/A-U	0-100% r.H.	-20...+80°C	2 x 0-10 V	without display	170,85
RKFT/A-UD	0-100% r.H.	-20...+80°C	2 x 0-10 V	with display	223,91
RKFT/A-UR	0-100% r.H.	-20...+80°C	2 x 0-10 V, changer	without display	181,47
RKFT/A-URD	0-100% r.H.	-20...+80°C	2 x 0-10 V, changer	with display	234,53

RKFTP/A

Article No. (CG 5)	Humidity	Temperature	Output r.H.	Output temperature	Version	Price EUR
RKFTP/A-I10	0-100% r.H.	-20...+80°C	4-20 mA	Pt100	without display	170,85
RKFTP/A-I10D	0-100% r.H.	-20...+80°C	4-20 mA	Pt100	with display	223,91
RKFTP/A-I20	0-100% r.H.	-20...+80°C	4-20 mA	Pt1000	without display	170,85
RKFTP/A-I20D	0-100% r.H.	-20...+80°C	4-20 mA	Pt1000	with display	223,91
RKFTP/A-IR10	0-100% r.H.	-20...+80°C	4-20 mA, changer	Pt100	without display	181,47
RKFTP/A-IR10D	0-100% r.H.	-20...+80°C	4-20 mA, changer	Pt100	with display	234,53
RKFTP/A-U10	0-100% r.H.	-20...+80°C	0-10 V	Pt100	without display	170,85
RKFTP/A-U10D	0-100% r.H.	-20...+80°C	0-10 V	Pt100	with display	223,91
RKFTP/A-U20	0-100% r.H.	-20...+80°C	0-10 V	Pt1000	without display	170,85
RKFTP/A-U20D	0-100% r.H.	-20...+80°C	0-10 V	Pt1000	with display	223,91
RKFTP/A-UR10	0-100% r.H.	-20...+80°C	0-10 V, changer	Pt100	without display	181,47
RKFTP/A-UR10D	0-100% r.H.	-20...+80°C	0-10 V, changer	Pt100	with display	234,53
RKFTP/A-UR20	0-100% r.H.	-20...+80°C	0-10 V, changer	Pt1000	without display	181,47
RKFTP/A-UR20D	0-100% r.H.	-20...+80°C	0-10 V, changer	Pt1000	with display	234,53

RL/A

Article No. (CG 5)	Supply voltage	Output VOC	Version	Price EUR
RL/A-UI	24 V AC/DC	0-10 V, 4-20 mA	without display	180,41
RL/A-UID	24 V AC/DC	0-10 V, 4-20 mA	with display	233,47
RL/A-UIR	24 V AC/DC	0-10 V, 4-20 mA, changer	without display	191,02
RL/A-UIRD	24 V AC/DC	0-10 V, 4-20 mA, changer	with display	244,08

RL2/A

Article No. (CG 5)	Supply voltage	Output VOC	Version	Price EUR
RL2/A-UI	24 V AC/DC	0-10 V, 4-20 mA	LED display	212,24
RL2/A-UIR	24 V AC/DC	0-10 V, 4-20 mA, changer	LED display	222,85

RLT/A

Article No. (CG 5)	Supply voltage	Output	Version	Price EUR
RLT/A-I	24 V AC/DC	2 x 4-20 mA	without display	212,24
RLT/A-ID	24 V AC/DC	2 x 4-20 mA	with display	265,30
RLT/A-IR	24 V AC/DC	2 x 4-20 mA, changer	without display	222,85
RLT/A-IRD	24 V AC/DC	2 x 4-20 mA, changer	with display	275,91
RLT/A-U	24 V AC/DC	2 x 0-10 V	without display	212,24
RLT/A-UD	24 V AC/DC	2 x 0-10 V	with display	265,30
RLT/A-UR	24 V AC/DC	2 x 0-10 V, changer	without display	222,85
RLT/A-URD	24 V AC/DC	2 x 0-10 V, changer	with display	275,91

RLU/A

Article No. (CG 5)	Supply voltage	Output VOC	Light switch program	Price EUR
RLU/A-U-G01	24 V AC/DC	0-10 V	GIRA Standard 55, pure white satin	229,22
RLU/A-UC-G01	24 V AC/DC	0-10 V, normally open contact	GIRA Standard 55, pure white satin	234,53

RM2/E

Article No. (CG 5)	MR temp. preset	Output temperature	Installation length	Price EUR
RM2/E-I100	0...+600°C	4-20 mA	100 mm	240,89
RM2/E-I200	0...+600°C	4-20 mA	200 mm	245,14
RM2/E-I300	0...+600°C	4-20 mA	300 mm	249,38
RM2/E-I400	0...+600°C	4-20 mA	400 mm	253,63
RM2/E-U100	0...+600°C	0-10 V	100 mm	240,89
RM2/E-U200	0...+600°C	0-10 V	200 mm	245,14
RM2/E-U300	0...+600°C	0-10 V	300 mm	249,38
RM2/E-U400	0...+600°C	0-10 V	400 mm	253,63

RRF(P)/A

Article No. (CG 5)	Humidity	Output r.H.	Cable length	Version	Price EUR
RRF(P)/A-I02	0-100% r.H.	4-20 mA	2 m	without display	191,02
RRF(P)/A-I02D	0-100% r.H.	4-20 mA	2 m	with display	244,08
RRF(P)/A-IR02	0-100% r.H.	4-20 mA, changer	2 m	without display	201,63
RRF(P)/A-IR02D	0-100% r.H.	4-20 mA, changer	2 m	with display	254,69
RRF(P)/A-U02	0-100% r.H.	0-10 V	2 m	without display	191,02
RRF(P)/A-U02D	0-100% r.H.	0-10 V	2 m	with display	244,08
RRF(P)/A-UR02	0-100% r.H.	0-10 V, changer	2 m	without display	201,63
RRF(P)/A-UR02D	0-100% r.H.	0-10 V, changer	2 m	with display	254,69

RRF/A

Article No. (CG 5)	Supply voltage	Humidity	Output r.H.	Version	Price EUR
RRF/A-I	15...36 V DC	0-100% r.H.	4-20 mA	without display	122,04
RRF/A-ID	15...36 V DC	0-100% r.H.	4-20 mA	with display	175,10
RRF/A-IR	15...36 V DC	0-100% r.H.	4-20 mA, changer	without display	132,65
RRF/A-IRD	15...36 V DC	0-100% r.H.	4-20 mA, changer	with display	185,71
RRF/A-U	24 V AC/DC	0-100% r.H.	0-10 V	without display	122,04
RRF/A-UD	24 V AC/DC	0-100% r.H.	0-10 V	with display	175,10

Article No. (CG 5)	Supply voltage	Humidity	Output r.H.	Version	Price EUR
RRF/A-UR	24 V AC/DC	0-100% r.H.	0-10 V, changer	without display	132,65
RRF/A-URD	24 V AC/DC	0-100% r.H.	0-10 V, changer	with display	185,71

RRFT(P)/A

Article No. (CG 5)	Humidity	Temperature	Output	Version	Price EUR
RRFT(P)/A-I02	0-100% r.H.	-20...+80°C	2 x 4-20 mA	without display	224,97
RRFT(P)/A-I02D	0-100% r.H.	-20...+80°C	2 x 4-20 mA	with display	278,03
RRFT(P)/A-IR02	0-100% r.H.	-20...+80°C	2 x 4-20 mA, changer	without display	235,59
RRFT(P)/A-IR02D	0-100% r.H.	-20...+80°C	2 x 4-20 mA, changer	with display	288,65
RRFT(P)/A-U02	0-100% r.H.	-20...+80°C	2 x 0-10 V	without display	224,97
RRFT(P)/A-U02D	0-100% r.H.	-20...+80°C	2 x 0-10 V	with display	278,03
RRFT(P)/A-UR02	0-100% r.H.	-20...+80°C	2 x 0-10 V, changer	without display	235,59
RRFT(P)/A-UR02D	0-100% r.H.	-20...+80°C	2 x 0-10 V, changer	with display	288,65

RRFT/A

Article No. (CG 5)	Humidity	Temperature	Output	Version	Price EUR
RRFT/A-I	0-100% r.H.	0...+50°C	2 x 4-20 mA	without display	131,06
RRFT/A-ID	0-100% r.H.	0...+50°C	2 x 4-20 mA	with display	184,12
RRFT/A-IR	0-100% r.H.	0...+50°C	2 x 4-20 mA, changer	without display	141,67
RRFT/A-IRD	0-100% r.H.	0...+50°C	2 x 4-20 mA, changer	with display	194,73
RRFT/A-U	0-100% r.H.	0...+50°C	2 x 0-10 V	without display	131,06
RRFT/A-UD	0-100% r.H.	0...+50°C	2 x 0-10 V	with display	184,12
RRFT/A-UR	0-100% r.H.	0...+50°C	2 x 0-10 V, changer	without display	141,67
RRFT/A-URD	0-100% r.H.	0...+50°C	2 x 0-10 V, changer	with display	194,73

RRFTP(P)/A

Article No. (CG 5)	Humidity	Temperature	Output r.H.	Output temperature	Version	Price EUR
RRFTP(P)/A-I10	0-100% r.H.	-20...+80°C	4-20 mA	Pt100	without display	214,36
RRFTP(P)/A-I10D	0-100% r.H.	-20...+80°C	4-20 mA	Pt100	with display	267,42
RRFTP(P)/A-I20	0-100% r.H.	-20...+80°C	4-20 mA	Pt1000	without display	214,36
RRFTP(P)/A-I20D	0-100% r.H.	-20...+80°C	4-20 mA	Pt1000	with display	267,42
RRFTP(P)/A-IR10	0-100% r.H.	-20...+80°C	4-20 mA, changer	Pt100	without display	224,97
RRFTP(P)/A-IR10D	0-100% r.H.	-20...+80°C	4-20 mA, changer	Pt100	with display	278,03
RRFTP(P)/A-IR20	0-100% r.H.	-20...+80°C	4-20 mA, changer	Pt1000	without display	224,97
RRFTP(P)/A-IR20D	0-100% r.H.	-20...+80°C	4-20 mA, changer	Pt1000	with display	278,03
RRFTP(P)/A-U10	0-100% r.H.	-20...+80°C	0-10 V	Pt100	without display	214,36
RRFTP(P)/A-U10D	0-100% r.H.	-20...+80°C	0-10 V	Pt100	with display	267,42
RRFTP(P)/A-U20	0-100% r.H.	-20...+80°C	0-10 V	Pt1000	without display	214,36
RRFTP(P)/A-U20D	0-100% r.H.	-20...+80°C	0-10 V	Pt1000	with display	267,42
RRFTP(P)/A-UR10	0-100% r.H.	-20...+80°C	0-10 V, changer	Pt100	without display	224,97
RRFTP(P)/A-UR10D	0-100% r.H.	-20...+80°C	0-10 V, changer	Pt100	with display	278,03
RRFTP(P)/A-UR20	0-100% r.H.	-20...+80°C	0-10 V, changer	Pt1000	without display	224,97
RRFTP(P)/A-UR20D	0-100% r.H.	-20...+80°C	0-10 V, changer	Pt1000	with display	278,03

RRFTP/A

Article No. (CG 5)	Humidity	Temperature	Output r.H.	Output temperature	Version	Price EUR
RRFTP/A-I10	0-100% r.H.	0...+50°C	4-20 mA	Pt100	without display	136,89
RRFTP/A-I10D	0-100% r.H.	0...+50°C	4-20 mA	Pt100	with display	189,95
RRFTP/A-I20	0-100% r.H.	0...+50°C	4-20 mA	Pt1000	without display	136,89
RRFTP/A-I20D	0-100% r.H.	0...+50°C	4-20 mA	Pt1000	with display	189,95
RRFTP/A-I30	0-100% r.H.	0...+50°C	4-20 mA	Ni1000 (glass passivated)	without display	136,89
RRFTP/A-I40	0-100% r.H.	0...+50°C	4-20 mA	Ni1000TK5000 (glass passivated)	without display	136,89
RRFTP/A-I60	0-100% r.H.	0...+50°C	4-20 mA	LM235Z	without display	136,89
RRFTP/A-I70	0-100% r.H.	0...+50°C	4-20 mA	NTC20k	without display	136,89
RRFTP/A-I80	0-100% r.H.	0...+50°C	4-20 mA	NTC10k	without display	136,89

Article No. (CG 5)	Humidity	Temperature	Output r.H.	Output temperature	Version	Price EUR
RRFTP/A-IR10	0-100% r.H.	0...+50°C	4-20 mA, changer	Pt100	without display	**147,51**
RRFTP/A-IR10D	0-100% r.H.	0...+50°C	4-20 mA, changer	Pt100	with display	**200,57**
RRFTP/A-IR20	0-100% r.H.	0...+50°C	4-20 mA, changer	Pt1000	without display	**147,51**
RRFTP/A-IR20D	0-100% r.H.	0...+50°C	4-20 mA, changer	Pt1000	with display	**200,57**
RRFTP/A-IR30	0-100% r.H.	0...+50°C	4-20 mA, changer	Ni1000 (glass passivated)	without display	**147,51**
RRFTP/A-IR40	0-100% r.H.	0...+50°C	4-20 mA, changer	Ni1000TK5000 (glass passivated)	without display	**147,51**
RRFTP/A-IR60	0-100% r.H.	0...+50°C	4-20 mA, changer	LM235Z	without display	**147,51**
RRFTP/A-IR70	0-100% r.H.	0...+50°C	4-20 mA, changer	NTC20k	without display	**147,51**
RRFTP/A-IR80	0-100% r.H.	0...+50°C	4-20 mA, changer	NTC10k	without display	**147,51**
RRFTP/A-U10	0-100% r.H.	0...+50°C	0-10 V	Pt100	without display	**136,89**
RRFTP/A-U10D	0-100% r.H.	0...+50°C	0-10 V	Pt100	with display	**189,95**
RRFTP/A-U20	0-100% r.H.	0...+50°C	0-10 V	Pt1000	without display	**136,89**
RRFTP/A-U20D	0-100% r.H.	0...+50°C	0-10 V	Pt1000	with display	**189,95**
RRFTP/A-U30	0-100% r.H.	0...+50°C	0-10 V	Ni1000 (glass passivated)	without display	**136,89**
RRFTP/A-U40	0-100% r.H.	0...+50°C	0-10 V	Ni1000TK5000 (glass passivated)	without display	**136,89**
RRFTP/A-U60	0-100% r.H.	0...+50°C	0-10 V	LM235Z	without display	**136,89**
RRFTP/A-U70	0-100% r.H.	0...+50°C	0-10 V	NTC20k	without display	**136,89**
RRFTP/A-U80	0-100% r.H.	0...+50°C	0-10 V	NTC10k	without display	**136,89**
RRFTP/A-UR10	0-100% r.H.	0...+50°C	0-10 V, changer	Pt100	without display	**147,51**
RRFTP/A-UR10D	0-100% r.H.	0...+50°C	0-10 V, changer	Pt100	with display	**200,57**
RRFTP/A-UR20	0-100% r.H.	0...+50°C	0-10 V, changer	Pt1000	without display	**147,51**
RRFTP/A-UR20D	0-100% r.H.	0...+50°C	0-10 V, changer	Pt1000	with display	**200,57**
RRFTP/A-UR30	0-100% r.H.	0...+50°C	0-10 V, changer	Ni1000 (glass passivated)	without display	**147,51**
RRFTP/A-UR40	0-100% r.H.	0...+50°C	0-10 V, changer	Ni1000TK5000 (glass passivated)	without display	**147,51**
RRFTP/A-UR60	0-100% r.H.	0...+50°C	0-10 V, changer	LM235Z	without display	**147,51**
RRFTP/A-UR70	0-100% r.H.	0...+50°C	0-10 V, changer	NTC20k	without display	**147,51**
RRFTP/A-UR80	0-100% r.H.	0...+50°C	0-10 V, changer	NTC10k	without display	**147,51**

RSF/E

Article No. (CG 1)	Sensor	Price EUR
RSF/E-10	Pt100 (DIN EN 60751 Cl. B)	**65,79**
RSF/E-20	Pt1000 (DIN EN 60751 Cl. B)	**65,79**
RSF/E-30	Ni1000 (whirl-sintered)	**67,92**
RSF/E-40	Ni1000TK5000 (whirl-sintered)	**67,92**
RSF/E-50	NTC1,8k (±1%)	**65,79**
RSF/E-60	LM235Z (±1%)	**65,79**
RSF/E-70	NTC20k (±1%)	**65,79**
RSF/E-80	NTC10k (±1%)	**65,79**
RSF/E-81	KTY 81-110 (±1%)	**65,79**
RSF/E-82	KTY 81-121 (±1%)	**65,79**
RSF/E-83	KTY 81-210 (±1%)	**65,79**

RTM1/E

Article No. (CG 5)	MR temp. preset	Output temperature	Version	Price EUR
RTM1/E-I	0...+50°C	4-20 mA	without display	**87,02**
RTM1/E-I2R	0...+50°C	4-20 mA, 2 changer	without display	**108,24**
RTM1/E-I2RD	0...+50°C	4-20 mA, 2 changer	with display	**161,30**
RTM1/E-ID	0...+50°C	4-20 mA	with display	**140,08**
RTM1/E-U	0...+50°C	0-10 V	without display	**87,02**
RTM1/E-U2R	0...+50°C	0-10 V, 2 changer	without display	**108,24**
RTM1/E-U2RD	0...+50°C	0-10 V, 2 changer	with display	**161,30**
RTM1/E-UD	0...+50°C	0-10 V	with display	**140,08**

SAS/D

Article No. (CG 3)	Description	Price EUR
SAS/D-1	hose connection set with 2 m PVC-hose, 2 plastic pipes and 4 fixing screws	**5,30**
SAS/D-5	PVC-hose 7mm / 5 mm (sold by the metre)	**2,12**

SB/E

Article No. (CG 3)	Description	Price EUR
SB/E-02	Snap-on mounting for DIN rails, industry housing (basic)	4,77
SB/E-03	Snap-on mounting for DIN rails, industry housing (premium)	6,62

SRW/N

Article No. (CG 2)	Medium	Pipe	Compressive strength	Core	Equipment	Price EUR
SRW/N-10	normal	1/2 inch	Max. 5 bar	Brass	t-Unit	152,82
SRW/N-20	normal	3/4 inch	Max. 5 bar	Brass	t-Unit	152,82
SRW/N-30	normal	1-8 inch	Max. 8 bar	Brass	paddle	152,82
SRW/N-40	normal	1-8 inch	Max. 5 bar	Brass	paddle	152,82
SRW/N-50	aggressive	1-8 inch	Max. 13 bar	V4A	paddle	337,55
SRW/N-60	aggressive	1-8 inch	Max. 5 bar	V4A	paddle	337,55

ST

Article No. (CG 3)	Description	Price EUR
ST2	Venturi pipe for duct smoke detector UG-5, 0,6 m	19,10
ST5	Venturi pipe for duct smoke detector UG-5, 1,5 m	30,77
ST9	Venturi pipe for duct smoke detector UG-5, 2,8 m	44,57

ST-P-OM

Article No. (CG 2)	Supply voltage	Output	Description	Preis EUR
ST-P-OM-24VRL	12...24 V DC	1 change-over contact	incl. smoke detector socket with integrated relay and short-circuit relay	161,80

ST/E

Article No. (CG 1)	Description	Working temperature	Colour	Price EUR
ST/E-01	Thermo zero-potential miniature TE-connector for thermocouples type K (NiCr-Ni), male	-50...+120°C	yellow	4,77
ST/E-02	Thermo zero-potential miniature TE-connector for thermocouples type K (NiCr-Ni), female	-50...+120°C	yellow	4,77
ST/E-03	Thermo zero-potential miniature TE-connector for thermocouples type J (FeCu-Ni), male	-50...+120°C	black	4,77

continued on next page

Article No. (CG 1)	Description	Working temperature	Colour	Price EUR
ST/E-04	Thermo zero-potential miniature TE-connector for thermocouples type J (FeCu-Ni), female	-50...+120°C	black	4,77
ST/E-10	Thermo zero-potential standard TE-connector for thermocouples type K (NiCr-Ni), male	-50...+120°C	yellow	6,36
ST/E-12	Thermo zero-potential standard TE-connector for thermocouples type K (NiCr-Ni), female	-50...+120°C	yellow	7,43
ST/E-13	Thermo zero-potential standard TE-connector for thermocouples type J (FeCu-Ni), male	-50...+120°C	black	7,43
ST/E-14	Thermo zero-potential standard TE-connector for thermocouples type J (FeCu-Ni), female	-50...+120°C	black	7,43
ST/E-40	Standard ceramic-connector for resistance thermometers, male	-50...+650°C	white	28,65
ST/E-45	Standard ceramic-connector for resistance thermometers, female	-50...+650°C	white	28,65

SWS/A

Article No. (CG 3)	Description	Price EUR
SWS/A-001	Radiation and weather protection, Ø 16 mm, 127 x 115 mm, incl. mounting angle	244,08
SWS/A-002	Radiation and weather protection, Ø 6 mm, 127 x 115 mm, incl. mounting angle	244,08

SZ/E

Article No. (CG 3)	Description	Price EUR
SZ02/E	Tension band, clamping range 60-110 mm, galvanized steel	2,65
SZ04/E	Heat transfer paste 2 ml (5 g) silicone free, -40...+150°C	4,14
SZ06/E	Ball shot protection	26,53
SZ08/E	Sun protection for AF2/E	15,92
SZ20/E	Power supply 24 V	22,29

TF1/B-1W

Article No. (CG 1)	Sensor	Temperature	Installation length	Serial number	Price EUR
TF1/B-1W/050	DS18B20+ (12 Bit, ±0,5 K)	-30...+125°C	50 mm	n/a	43,51
TF1/B-1W/050-dec	DS18B20+ (12 Bit, ±0,5 K)	-30...+125°C	50 mm	dec	45,63
TF1/B-1W/050-hex	DS18B20+ (12 Bit, ±0,5 K)	-30...+125°C	50 mm	hex	45,63
TF1/B-1W/100	DS18B20+ (12 Bit, ±0,5 K)	-30...+125°C	100 mm	n/a	44,57
TF1/B-1W/100-dec	DS18B20+ (12 Bit, ±0,5 K)	-30...+125°C	100 mm	dec	46,70
TF1/B-1W/100-hex	DS18B20+ (12 Bit, ±0,5 K)	-30...+125°C	100 mm	hex	46,70
TF1/B-1W/150	DS18B20+ (12 Bit, ±0,5 K)	-30...+125°C	150 mm	n/a	45,63
TF1/B-1W/150-dec	DS18B20+ (12 Bit, ±0,5 K)	-30...+125°C	150 mm	dec	47,76
TF1/B-1W/150-hex	DS18B20+ (12 Bit, ±0,5 K)	-30...+125°C	150 mm	hex	47,76
TF1/B-1W/200	DS18B20+ (12 Bit, ±0,5 K)	-30...+125°C	200 mm	n/a	46,70
TF1/B-1W/200-dec	DS18B20+ (12 Bit, ±0,5 K)	-30...+125°C	200 mm	dec	48,82
TF1/B-1W/200-hex	DS18B20+ (12 Bit, ±0,5 K)	-30...+125°C	200 mm	hex	48,82
TF1/B-1W/250	DS18B20+ (12 Bit, ±0,5 K)	-30...+125°C	250 mm	n/a	47,76
TF1/B-1W/250-dec	DS18B20+ (12 Bit, ±0,5 K)	-30...+125°C	250 mm	dec	49,88
TF1/B-1W/250-hex	DS18B20+ (12 Bit, ±0,5 K)	-30...+125°C	250 mm	hex	49,88
TF1/B-1W/300	DS18B20+ (12 Bit, ±0,5 K)	-30...+125°C	300 mm	n/a	48,82
TF1/B-1W/300-dec	DS18B20+ (12 Bit, ±0,5 K)	-30...+125°C	300 mm	dec	50,94
TF1/B-1W/350	DS18B20+ (12 Bit, ±0,5 K)	-30...+125°C	350 mm	n/a	49,88
TF1/B-1W/350-dec	DS18B20+ (12 Bit, ±0,5 K)	-30...+125°C	350 mm	dec	52,00
TF1/B-1W/400	DS18B20+ (12 Bit, ±0,5 K)	-30...+125°C	400 mm	n/a	50,94
TF1/B-1W/400-dec	DS18B20+ (12 Bit, ±0,5 K)	-30...+125°C	400 mm	dec	53,06
Available in other installation lengths					special versions see page 24

TF1/E

Article No. (CG 1)	Sensor	Installation length	Price EUR
TF1/E-10/050	Pt100 (DIN EN 60751 Cl. B)	50 mm	36,08
TF1/E-20/050	Pt1000 (DIN EN 60751 Cl. B)	50 mm	36,08
TF1/E-30/050	Ni1000 (whirl-sintered)	50 mm	38,20
TF1/E-40/050	Ni1000TK5000 (whirl-sintered)	50 mm	38,20
TF1/E-60/050	LM235Z (±1%)	50 mm	36,08
TF1/E-70/050	NTC20k (±1%)	50 mm	36,08
TF1/E-80/050	NTC10k (±1%)	50 mm	36,08
Available in other installation lengths			special versions see page 24

TF4/E

Article No. (CG 1)	Sensor	Installation length	Price EUR
TF4/E-10	Pt100 (DIN EN 60751 Cl. B)	100-400 mm	**39,80**
TF4/E-15	Pt500 (DIN EN 60751 Cl. B)	100-400 mm	**39,80**
TF4/E-20	Pt1000 (DIN EN 60751 Cl. B)	100-400 mm	**39,80**
TF4/E-30	Ni1000 (whirl-sintered)	100-400 mm	**41,92**
TF4/E-40	Ni1000TK5000 (whirl-sintered)	100-400 mm	**41,92**
TF4/E-60	LM235Z (±1%)	100-400 mm	**39,80**
TF4/E-70	NTC20k (±1%)	100-400 mm	**39,80**
TF4/E-75	NTC5k (±1%)	100-400 mm	**39,80**
TF4/E-80	NTC10k (±1%)	100-400 mm	**39,80**
TF4/E-81	KTY 81-110 (±1%)	100-400 mm	**39,80**
TF4/E-82	KTY 81-121 (±1%)	100-400 mm	**39,80**
TF4/E-83	KTY 81-210 (KTY 10-6) (±1%)	100-400 mm	**39,80**

TF5/E

Article No. (CG 1)	Sensor	Cable	Dimensions	Price EUR
TF5/E-10/6.0/050/2-2	Pt100 (DIN EN 60751 Cl. B)	2 m silicone (2x0,22 mm²)	Ø 6 x 50 mm	**19,64**
TF5/E-10/6.0/050/2-4	Pt100 (DIN EN 60751 Cl. B)	2 m silicone (4x0,22 mm²)	Ø 6 x 50 mm	**24,94**
TF5/E-10/6.0/050/5-2	Pt100 (DIN EN 60751 Cl. B)	5 m silicone (2x0,22 mm²)	Ø 6 x 50 mm	**23,45**
TF5/E-10/6.0/050/5-4	Pt100 (DIN EN 60751 Cl. B)	5 m silicone (4x0,22 mm²)	Ø 6 x 50 mm	**33,21**
TF5/E-20/6.0/050/2-2	Pt1000 (DIN EN 60751 Cl. B)	2 m silicone (2x0,22 mm²)	Ø 6 x 50 mm	**19,64**
TF5/E-20/6.0/050/2-4	Pt1000 (DIN EN 60751 Cl. B)	2 m silicone (4x0,22 mm²)	Ø 6 x 50 mm	**24,94**
TF5/E-20/6.0/050/5-2	Pt1000 (DIN EN 60751 Cl. B)	5 m silicone (2x0,22 mm²)	Ø 6 x 50 mm	**23,45**
TF5/E-20/6.0/050/5-4	Pt1000 (DIN EN 60751 Cl. B)	5 m silicone (4x0,22 mm²)	Ø 6 x 50 mm	**33,21**
Available in other cable lengths				**special versions see page 24**

TF7/E

Article No. (CG 1)	Sensor	Temperature	Installation length	Price EUR
TF7/E-10/050	Pt100 (DIN EN 60751 Cl. B)	-30...+180°C	50 mm	**44,57**
TF7/E-20/050	Pt1000 (DIN EN 60751 Cl. B)	-30...+180°C	50 mm	**44,57**
Available in other installation lengths				**special versions see page 24**

TF8/E

Article No. (CG 1)	Sensor	Temperature	Installation length	Price EUR
TF8/E-10/050	Pt100 (DIN EN 60751 Cl. B)	-30...+90°C	50 mm	38,20
TF8/E-10/100	Pt100 (DIN EN 60751 Cl. B)	-30...+90°C	100 mm	39,80
TF8/E-10/150	Pt100 (DIN EN 60751 Cl. B)	-30...+90°C	150 mm	41,39
TF8/E-10/200	Pt100 (DIN EN 60751 Cl. B)	-30...+90°C	200 mm	42,98
TF8/E-10/250	Pt100 (DIN EN 60751 Cl. B)	-30...+90°C	250 mm	44,57
TF8/E-10/300	Pt100 (DIN EN 60751 Cl. B)	-30...+90°C	300 mm	46,17
TF8/E-10/350	Pt100 (DIN EN 60751 Cl. B)	-30...+90°C	350 mm	47,76
TF8/E-10/400	Pt100 (DIN EN 60751 Cl. B)	-30...+90°C	400 mm	49,35
TF8/E-20/050	Pt1000 (DIN EN 60751 Cl. B)	-30...+90°C	50 mm	38,20
TF8/E-20/100	Pt1000 (DIN EN 60751 Cl. B)	-30...+90°C	100 mm	39,80
TF8/E-20/150	Pt1000 (DIN EN 60751 Cl. B)	-30...+90°C	150 mm	41,39
TF8/E-20/200	Pt1000 (DIN EN 60751 Cl. B)	-30...+90°C	200 mm	42,98
TF8/E-20/250	Pt1000 (DIN EN 60751 Cl. B)	-30...+90°C	250 mm	44,57
TF8/E-20/300	Pt1000 (DIN EN 60751 Cl. B)	-30...+90°C	300 mm	46,17
TF8/E-20/350	Pt1000 (DIN EN 60751 Cl. B)	-30...+90°C	350 mm	47,76
TF8/E-20/400	Pt1000 (DIN EN 60751 Cl. B)	-30...+90°C	400 mm	49,35

TH3/Z

Article No. (CG 1)	Compressive strength	Material	Installation length	Working temperature	Price EUR
TH3/Z-ES0.5	40 bar	stainless steel	50 mm	Tmax. +200°C	21,23
TH3/Z-ES1.0	40 bar	stainless steel	100 mm	Tmax. +200°C	21,76
TH3/Z-ES1.5	40 bar	stainless steel	150 mm	Tmax. +200°C	22,29
TH3/Z-ES2.0	40 bar	stainless steel	200 mm	Tmax. +200°C	22,82
TH3/Z-ES2.5	40 bar	stainless steel	250 mm	Tmax. +200°C	23,35
TH3/Z-ES3.0	40 bar	stainless steel	300 mm	Tmax. +200°C	23,88
TH3/Z-ES3.5	40 bar	stainless steel	350 mm	Tmax. +200°C	24,41

continued on next page

Article No. (CG 1)	Compressive strength	Material	Installation length	Working temperature	Price EUR
TH3/Z-ES4.0	40 bar	stainless steel	400 mm	Tmax. +200°C	24,94
TH3/Z-MS0.5	16 bar	brass	50 mm	Tmax. +150°C	11,67
TH3/Z-MS1.0	16 bar	brass	100 mm	Tmax. +150°C	12,20
TH3/Z-MS1.5	16 bar	brass	150 mm	Tmax. +150°C	12,73
TH3/Z-MS2.0	16 bar	brass	200 mm	Tmax. +150°C	13,27
TH3/Z-MS2.5	16 bar	brass	250 mm	Tmax. +150°C	13,80
TH3/Z-MS3.0	16 bar	brass	300 mm	Tmax. +150°C	14,33
TH3/Z-MS3.5	16 bar	brass	350 mm	Tmax. +150°C	14,86
TH3/Z-MS4.0	16 bar	brass	400 mm	Tmax. +150°C	15,39

TPF1/E

Article No. (CG 1)	Sensor	Cable	Price EUR
TPF1/E-10	Pt100 (DIN EN 60751 Cl. B)	2 m PVC (2x0,25 mm²)	63,67
TPF1/E-20	Pt1000 (DIN EN 60751 Cl. B)	2 m PVC (2x0,25 mm²)	63,67
TPF1/E-30	Ni1000 (whirl-sintered)	2 m PVC (2x0,25 mm²)	65,79
TPF1/E-40	Ni1000TK5000 (whirl-sintered)	2 m PVC (2x0,25 mm²)	65,79
TPF1/E-60	LM235Z (±1%)	2 m PVC (2x0,25 mm²)	63,67
TPF1/E-70	NTC20k (±1%)	2 m PVC (2x0,25 mm²)	63,67
TPF1/E-80	NTC10k (±1%)	2 m PVC (2x0,25 mm²)	63,67
Available in other cable lengths			special versions see page 24

TPF2/E

Article No. (CG 1)	Sensor	Cable	Price EUR
TPF2/E-10	Pt100 (DIN EN 60751 Cl. B)	2 m PVC (2x0,25 mm²)	53,06
TPF2/E-20	Pt1000 (DIN EN 60751 Cl. B)	2 m PVC (2x0,25 mm²)	53,06
TPF2/E-30	Ni1000 (whirl-sintered)	2 m PVC (2x0,25 mm²)	55,18
TPF2/E-40	Ni1000TK5000 (whirl-sintered)	2 m PVC (2x0,25 mm²)	55,18
TPF2/E-60	LM235Z (±1%)	2 m PVC (2x0,25 mm²)	53,06
TPF2/E-70	NTC20k (±1%)	2 m PVC (2x0,25 mm²)	53,06
TPF2/E-80	NTC10k (±1%)	2 m PVC (2x0,25 mm²)	53,06
Available in other cable lengths			special versions see page 24

TPK/E

Article No. (CG 1)	Thermocouple	Cable length	Cable material	Price EUR
TPK/E-1.2/1.5	type K	1500 mm	Glass fibre	23,35

TPM1/E

Article No. (CG 5)	MR temp. preset	Output temperature	Cable	Version	Price EUR
TPM1/E-I	0...+100°C	4-20 mA	2 m PVC (2x0,25 mm²)	without display	129,47
TPM1/E-I2R	0...+100°C	4-20 mA, 2 changer	2 m PVC (2x0,25 mm²)	without display	150,69
TPM1/E-I2RD	0...+100°C	4-20 mA, 2 changer	2 m PVC (2x0,25 mm²)	with display	203,76
TPM1/E-ID	0...+100°C	4-20 mA	2 m PVC (2x0,25 mm²)	with display	182,53
TPM1/E-U	0...+100°C	0-10 V	2 m PVC (2x0,25 mm²)	without display	129,47
TPM1/E-U2R	0...+100°C	0-10 V, 2 changer	2 m PVC (2x0,25 mm²)	without display	150,69
TPM1/E-U2RD	0...+100°C	0-10 V, 2 changer	2 m PVC (2x0,25 mm²)	with display	203,76
TPM1/E-UD	0...+100°C	0-10 V	2 m PVC (2x0,25 mm²)	with display	182,53

TPM2/E

Article No. (CG 5)	MR temp. preset	Output temperature	Cable	Version	Price EUR
TPM2/E-I	0...+100°C	4-20 mA	2 m PVC (2x0,25 mm²)	without display	129,47
TPM2/E-I2R	0...+100°C	4-20 mA, 2 changer	2 m PVC (2x0,25 mm²)	without display	150,69
TPM2/E-I2RD	0...+100°C	4-20 mA, 2 changer	2 m PVC (2x0,25 mm²)	with display	203,76
TPM2/E-ID	0...+100°C	4-20 mA	2 m PVC (2x0,25 mm²)	with display	182,53
TPM2/E-U	0...+100°C	0-10 V	2 m PVC (2x0,25 mm²)	without display	129,47
TPM2/E-U2R	0...+100°C	0-10 V, 2 changer	2 m PVC (2x0,25 mm²)	without display	150,69
TPM2/E-U2RD	0...+100°C	0-10 V, 2 changer	2 m PVC (2x0,25 mm²)	with display	203,76
TPM2/E-UD	0...+100°C	0-10 V	2 m PVC (2x0,25 mm²)	with display	182,53

TW/A

Article No. (CG 5)	Humidity	Output r.H.	Version	Price EUR
TW/A-I	0-100% r.H.	4-20 mA	without display	**144,32**
TW/A-R	0-100% r.H.	change-over contact	with display	**117,79**
TW/A-U	0-100% r.H.	0-10 V	without display	**144,32**

UG-5

Article No. (CG 5)	Supply voltage	Output	Approvals	Price EUR
UG-5-AFR-230V	230 V AC	2 change-over contacts, 3 normally-open contacts	VdS, CE	**403,26**
UG-5-AFR-230V-MB	230 V AC	2 change-over contacts, 3 normally-open contacts, Modbus	VdS, CE	**472,24**
UG-5-AFR-230V-MB-Z	230 V AC	2 change-over contacts, 3 normally-open contacts, Modbus	VdS, CE, DIBt	**854,27**
UG-5-AFR-230V-Z	230 V AC	2 change-over contacts, 3 normally-open contacts	VdS, CE, DIBt	**785,30**
UG-5-AFR-24V	24 V AC/DC	2 change-over contacts, 3 normally-open contacts	VdS, CE	**382,03**
UG-5-AFR-24V-MB	24 V AC/DC	2 change-over contacts, 3 normally-open contacts, Modbus	VdS, CE	**451,01**
UG-5-AFR-24V-MB-Z	24 V AC/DC	2 change-over contacts, 3 normally-open contacts, Modbus	VdS, CE, DIBt	**833,04**
UG-5-AFR-24V-Z	24 V AC/DC	2 change-over contacts, 3 normally-open contacts	VdS, CE, DIBt	**764,07**

UG-B

Article No. (CG 3)	Description	Price EUR
UG-B-5	Mounting bracket for duct smoke detector UG-5	**30,77**

UG-COVER

Article No. (CG 3)	Description	Price EUR
UG-COVER-75	Protective housing for duct smoke detector UG-5	**132,65**

UM1/E

Article No. (CG 5)	MR temp. preset	Output temperature	Light switch program	Price EUR
UM1/E-I-G01	0...+50°C	4-20 mA	GIRA Standard 55, pure white satin	**107,18**
UM1/E-U-G01	0...+50°C	0-10 V	GIRA Standard 55, pure white satin	**107,18**

UP1/E

Article No. (CG 1)	Sensor	Light switch program	Price EUR
UP1/E-G10	Pt100 (DIN EN 60751 Kl. B)	GIRA Standard 55, pure white satin	**52,00**
UP1/E-G20	Pt1000 (DIN EN 60751 Kl. B)	GIRA Standard 55, pure white satin	**52,00**
UP1/E-G30	Ni1000 (whirl-sintered)	GIRA Standard 55, pure white satin	**54,12**
UP1/E-G40	Ni1000TK5000 (whirl-sintered)	GIRA Standard 55, pure white satin	**54,12**
UP1/E-G60	LM235Z (±1%)	GIRA Standard 55, pure white satin	**52,00**
UP1/E-G70	NTC20k (±1%)	GIRA Standard 55, pure white satin	**52,00**
UP1/E-G80	NTC10k (±1%)	GIRA Standard 55, pure white satin	**52,00**

UP1/R

Article No. (CG 2)	Sensor	Light switch program	Equipment	Price EUR
UP1/R-G10	Pt100 (DIN EN 60751 Cl. B)	GIRA Standard 55, pure white satin	1 kOhm Poti (±5%)	**68,98**
UP1/R-G20	Pt1000 (DIN EN 60751 Cl. B)	GIRA Standard 55, pure white satin	1 kOhm Poti (±5%)	**68,98**
UP1/R-G30	Ni1000 (whirl-sintered)	GIRA Standard 55, pure white satin	1 kOhm Poti (±5%)	**71,10**
UP1/R-G40	Ni1000TK5000 (whirl-sintered)	GIRA Standard 55, pure white satin	1 kOhm Poti (±5%)	**71,10**
UP1/R-G60	LM235Z (±1%)	GIRA Standard 55, pure white satin	1 kOhm Poti (±5%)	**68,98**
UP1/R-G70	NTC20k (±1%)	GIRA Standard 55, pure white satin	1 kOhm Poti (±5%)	**68,98**
UP1/R-G80	NTC10k (±1%)	GIRA Standard 55, pure white satin	1 kOhm Poti (±5%)	**68,98**

UP2/R

Article No. (CG 2)	Sensor	Light switch program	Equipment	Price EUR
UP2/R-G10	Pt100 (DIN EN 60751 Cl. B)	GIRA Standard 55, pure white satin	1 button (black), 1 LED (24 V DC, green)	**58,36**
UP2/R-G20	Pt1000 (DIN EN 60751 Cl. B)	GIRA Standard 55, pure white satin	1 button (black), 1 LED (24 V DC, green)	**58,36**
UP2/R-G30	Ni1000 (whirl-sintered)	GIRA Standard 55, pure white satin	1 button (black), 1 LED (24 V DC, green)	**60,49**
UP2/R-G40	Ni1000TK5000 (whirl-sintered)	GIRA Standard 55, pure white satin	1 button (black), 1 LED (24 V DC, green)	**60,49**
UP2/R-G60	LM235Z (±1%)	GIRA Standard 55, pure white satin	1 button (black), 1 LED (24 V DC, green)	**58,36**
UP2/R-G70	NTC20k (±1%)	GIRA Standard 55, pure white satin	1 button (black), 1 LED (24 V DC, green)	**58,36**
UP2/R-G80	NTC10k (±1%)	GIRA Standard 55, pure white satin	1 button (black), 1 LED (24 V DC, green)	**58,36**

UP3/R

Article No. (CG 2)	Sensor	Light switch program	Equipment	Price EUR
UP3/R-G10	Pt100 (DIN EN 60751 Cl. B)	GIRA Standard 55, pure white satin	1 kOhm Poti (±5%), 4-ranks rotary switch (24 V DC)	**90,20**
UP3/R-G20	Pt1000 (DIN EN 60751 Cl. B)	GIRA Standard 55, pure white satin	1 kOhm Poti (±5%), 4-ranks rotary switch (24 V DC)	**90,20**
UP3/R-G30	Ni1000 (whirl-sintered)	GIRA Standard 55, pure white satin	1 kOhm Poti (±5%), 4-ranks rotary switch (24 V DC)	**92,32**
UP3/R-G40	Ni1000TK5000 (whirl-sintered)	GIRA Standard 55, pure white satin	1 kOhm Poti (±5%), 4-ranks rotary switch (24 V DC)	**92,32**
UP3/R-G60	LM235Z (±1%)	GIRA Standard 55, pure white satin	1 kOhm Poti (±5%), 4-ranks rotary switch (24 V DC)	**90,20**
UP3/R-G70	NTC20k (±1%)	GIRA Standard 55, pure white satin	1 kOhm Poti (±5%), 4-ranks rotary switch (24 V DC)	**90,20**
UP3/R-G80	NTC10k (±1%)	GIRA Standard 55, pure white satin	1 kOhm Poti (±5%), 4-ranks rotary switch (24 V DC)	**90,20**

UP4/R

Article No. (CG 2)	Sensor	Light switch program	Equipment	Price EUR
UP4/R-G10	Pt100 (DIN EN 60751 Cl. B)	GIRA Standard 55, pure white satin	1 kOhm Poti (±5%), 1 button (black), 1 LED (24 V DC, green)	**93,39**
UP4/R-G20	Pt1000 (DIN EN 60751 Cl. B)	GIRA Standard 55, pure white satin	1 kOhm Poti (±5%), 1 button (black), 1 LED (24 V DC, green)	**93,39**
UP4/R-G30	Ni1000 (whirl-sintered)	GIRA Standard 55, pure white satin	1 kOhm Poti (±5%), 1 button (black), 1 LED (24 V DC, green)	**95,51**
UP4/R-G40	Ni1000TK5000 (whirl-sintered)	GIRA Standard 55, pure white satin	1 kOhm Poti (±5%), 1 button (black), 1 LED (24 V DC, green)	**95,51**
UP4/R-G60	LM235Z (±1%)	GIRA Standard 55, pure white satin	1 kOhm Poti (±5%), 1 button (black), 1 LED (24 V DC, green)	**93,39**
UP4/R-G70	NTC20k (±1%)	GIRA Standard 55, pure white satin	1 kOhm Poti (±5%), 1 button (black), 1 LED (24 V DC, green)	**93,39**
UP4/R-G80	NTC10k (±1%)	GIRA Standard 55, pure white satin	1 kOhm Poti (±5%), 1 button (black), 1 LED (24 V DC, green)	**93,39**

UP5/R

Article No. (CG 2)	Sensor	Light switch program	Equipment	Price EUR
UP5/R-G10	Pt100 (DIN EN 60751 Cl. B)	GIRA Standard 55, pure white satin	1 kOhm Poti (±5%), 3-ranks rotary switch (24 V DC), 1 LED (24 V DC, green), 1 LED (24 V DC, red)	**94,45**
UP5/R-G20	Pt1000 (DIN EN 60751 Cl. B)	GIRA Standard 55, pure white satin	1 kOhm Poti (±5%), 3-ranks rotary switch (24 V DC), 1 LED (24 V DC, green), 1 LED (24 V DC, red)	**94,45**
UP5/R-G30	Ni1000 (whirl-sintered)	GIRA Standard 55, pure white satin	1 kOhm Poti (±5%), 3-ranks rotary switch (24 V DC), 1 LED (24 V DC, green), 1 LED (24 V DC, red)	**96,57**
UP5/R-G40	Ni1000TK5000 (whirl-sintered)	GIRA Standard 55, pure white satin	1 kOhm Poti (±5%), 3-ranks rotary switch (24 V DC), 1 LED (24 V DC, green), 1 LED (24 V DC, red)	**96,57**
UP5/R-G60	LM235Z (±1%)	GIRA Standard 55, pure white satin	1 kOhm Poti (±5%), 3-ranks rotary switch (24 V DC), 1 LED (24 V DC, green), 1 LED (24 V DC, red)	**94,45**
UP5/R-G70	NTC20k (±1%)	GIRA Standard 55, pure white satin	1 kOhm Poti (±5%), 3-ranks rotary switch (24 V DC), 1 LED (24 V DC, green), 1 LED (24 V DC, red)	**94,45**
UP5/R-G80	NTC10k (±1%)	GIRA Standard 55, pure white satin	1 kOhm Poti (±5%), 3-ranks rotary switch (24 V DC), 1 LED (24 V DC, green), 1 LED (24 V DC, red)	**94,45**

WFR/N

Article No. (CG 2)	Output flow	Differential	Price EUR
WFR/N-10	change-over contact	> 1 m/s	**81,61**

WG/O

Article No. (CG 2)	Wind speed	Output wind speed	Price EUR
WG/O-10	0-50 m/s	0-10 V	**827,74**
WG/O-50	0-50 m/s	4-20 mA	**827,74**

WG2/O

Article No. (CG 2)	Supply voltage	Wind speed	Output wind speed	Price EUR
WG2/O-10	24 V AC/DC	0-50 m/s	0-10 V	**493,47**
WG2/O-50	24 V AC/DC	0-50 m/s	4-20 mA	**493,47**

WRG/O

Article No. (CG 2)	Supply voltage	Wind direction	Output wind direction	Price EUR
WRG/O-20	15...28 V DC / 24 V AC	0-360°	4-20 mA	**1.395,49**
WRG/O-40	15...28 V DC / 24 V AC	0-360°	0-10 V	**1.395,49**

WRG2/O

Article No. (CG 2)	Supply voltage	Wind direction	Output wind direction	Price EUR
WRG2/O-10	24 V AC/DC	0-360°	0-10 V	**578,36**
WRG2/O-50	24 V AC/DC	0-360°	4-20 mA	**578,36**

ZM/O

Article No. (CG 2)	Description	Material	Price EUR
ZM/O-30	Traverse 0,6 m for 2 wind sensors (wind speed/direction) for the mounting on the top of a mast peak	aluminium	**404,43**
ZM/O-35	Traverse 0,2 m for 1 wind sensor (Wind speed or direction) for the mounting on a facade	aluminium	**85,26**
ZM/O-40	Traverse 0,8 m for 2 wind sensors (wind speed/direction) for the mounting on a mast Ø 48-102 mm	aluminium	**107,12**
ZM/O-50	Traverse 0,4 m for 1 wind sensor (Wind speed or direction) for a mast diameter of 48-102 mm	aluminium	**85,26**
ZM/O-60	Fastener Compact for the mounting of a wind sensor on a surface, mast or pipe	stainless steel	**78,70**
ZM/O-65	Mounting bracket for lateral mounting of the weather station FS6003 on a vertical surface, 250 x 42 mm	Niro 1.4301	**58,26**

Article No. (CG 2)	Description	Material	Price EUR
ZM/O-70	Base plate and adapter for the mounting of pyranometer on a traverse	aluminium	85,26
ZM/O-75	Cone complete for adaptation of a wind giver on traverse compact	POM	33,88
ZM/O-76	Adapter / cone complete for adaptation of a wind giver on traverse compact	aluminium	33,88
ZM/O-77	Adapter FS6003, für Halter ZM/O-60 oder Traverse ZM/O-50	POM	70,38
ZM/O-80	Lightning rod for the mounting on a mast, traverse or pipe	stainless steel	33,88
ZM/O-90	Connection cable for FS6002, 10 m FRNC 16 x 0.25 mm^2, open ends on the receiving side, shielded, halogen-free, UV-resistant	-	220,31
ZM/O-91	Connection cable for FS6003, 10 m, 5-pin, open ends on the receiving end, shielded, halogen-free, UV-resistant	-	74,29

ZT/E

Article No. (CG 1)	Compressive strength	Material	Installation length	Working temperature	Price EUR
ZT/E-ES0.5	40 bar	stainless steel	50 mm	Tmax. +600°C	18,57
ZT/E-ES1	40 bar	stainless steel	100 mm	Tmax. +600°C	19,10
ZT/E-ES1.5	40 bar	stainless steel	150 mm	Tmax. +600°C	19,64
ZT/E-ES2	40 bar	stainless steel	200 mm	Tmax. +600°C	20,17
ZT/E-ES2.5	40 bar	stainless steel	250 mm	Tmax. +600°C	20,70
ZT/E-ES3	40 bar	stainless steel	300 mm	Tmax. +600°C	21,23
ZT/E-ES3.5	40 bar	stainless steel	350 mm	Tmax. +600°C	21,76
ZT/E-ES4	40 bar	stainless steel	400 mm	Tmax. +600°C	22,29
ZT/E-MS0.5	16 bar	brass	50 mm	Tmax. +150°C	9,02
ZT/E-MS1	16 bar	brass	100 mm	Tmax. +150°C	9,55
ZT/E-MS1.5	16 bar	brass	150 mm	Tmax. +150°C	10,08
ZT/E-MS2	16 bar	brass	200 mm	Tmax. +150°C	10,61
ZT/E-MS2.5	16 bar	brass	250 mm	Tmax. +150°C	11,14
ZT/E-MS3	16 bar	brass	300 mm	Tmax. +150°C	11,67
ZT/E-MS3.5	16 bar	brass	350 mm	Tmax. +150°C	12,20
ZT/E-MS4	16 bar	brass	400 mm	Tmax. +150°C	12,73

General Terms & Conditions of the FuehlerSysteme eNET International GmbH

I. General

The following Terms and Conditions shall apply to enterprisers for the purposes of §14 German Civil Code for whom the purchase is a legal business in exercise of its commercial or independent activity. Exclusively these general terms and conditions shall apply to all business relations. Conflicting conditions of the customer or conditions differing from those indicated in our General Terms and Conditions cannot be accepted, unless approved of by us in writing in individual cases. Our Terms and Conditions shall apply to the delivery to the customer even we take note of conflicting conditions of the customer or conditions differing from those indicated in our General Terms and Conditions

The customer renounces information according to §312 e I. No. 2 German Civil Code as amended

The range of products and the corresponding descriptions are complited by us with the high diligence. Nevertheless, we assume no liability for possible aberrations, technical changes in the goods and the persistent ability of delivery of all goods. Our offers are open offer. Provided that confirmations of order are sent by us, these are authoritatively for the contract contents

II. Formation of Contract

We deliver the goods ordered by the customers after prompt electronic order acceptance, according to performed conditions and delivery times.

Exclusively the prices given in the goods basket shall apply to orders in the e-commerce.

We strive to provide an error-free website, including prices, product information, product specifications and product availability. As such, we reserve the right to correct any errors as they are discovered. The customer will be informed immediately and can confirm the modified order. Otherwise we are entitled to cancel the contract. Already received payments will be remunerated.

III. Prices and Discounts

The mentioned list prices are ex works Nuremberg exclusively packaging and transport costs plus the applicable VAT.

A discount grading is done by appointment only and may be regraded by us at any time.

IV. Terms of Payment

You can select as corporate clients (also as freelancer) between prepayment (see below 2.), cash on delivery (see below 2.) and on invoice (see below 3.).

Payment in advance is accepted only per bank transfer or bar check. A discount deduction in c.o.d. is excluded. By payment in advance a delivery of goods takes place at the latest 5-7 work day after payment entrance (according to order confirmation).

By payment on invoice this is due within 10 days with 2% discount or within 20 days net from invoice date.

Our demands become due immediately. If the customer is in default of payment, we shall be entitled to charge default interest at a rate of 8% above basic interest rate of the our Bank discount rate for the period during which the payment has been overdue. All our demands become due immediately independent of the running time of credited draft if a payment appointment is not kept or the buyer offends against other contractual agreements or circumstances confessed, that are suited to decrease the credit worthiness of the buyer. Furthermore in such a case, we are entitled to carry out outstanding deliveries only against advance payment or security achievement and to withdraw from the contract and/or to demand a debt compensation.

The Purchaser shall have set-off rights only with respect to counterclaims which are res judicata, undisputed or accepted by us. Moreover, the Purchaser may exercise any right of retention only to the extent such counterclaim is based on the same contractual relationship.

V. Delivery

The ordered goods will be delivered to the buyer by one of package service shown by us. The buyer bears all delivery costs of the ordered products. The freight costs are based on order and delivery country.

The delivery times will be only confirmed non-binding by the electronic order confirmation. The date of delivery shall be the date of dispatch to the customer. Risk of accidental loss or damage passes to the buyer upon delivery of the goods to the carrier at the place of performance. Buyer assumes all responsibility and risks for the use of the products after their delivery. It shall apply even the buyer is in delay to accept delivery.

The receipt of goods should be promptly checked for correctness and completeness on the basis of the delivery note by the buyer. The buyer is liable for delayed claims, and these cannot be considered by the sender. If other goods or quantities were delivered, it should be directly announce to the sender. The supplier will promptly check the complaint and will find a remedy as fast as possible. Returning of goods must be notified in written form or by telephone prior to the return delivery. Only with the prior written acceptance of us original packaged and as good as new items will be withdrawn within 10 working days. In the case of a return, for the reasons we are not responsible, the value of the goods is generally credited with only 70 %. The shipping costs are not refundable. Custom-made products are generally non-returnable. Only EX Works (EXW) returns will be accepted.

VI. Retention of Title

All delivered goods, until payment of all of our demands, irrespective of business relation with the customer, remain our all property. If Buyer fails in any way fulfill the Terms and Conditions, especially default payment, we reserve the right to take back the delivered goods with following cancellation of the contract. We are authorized to utilization of the retaining goods, the utilization proceeds are on the obligations of the customer - less adequate utilization costs.

The buyer is obligated to inform us immediately of a seizure or another impairment by third parties, so that we may file suit according to § 771 of the Civil Process Order. If the third party is not able to compensate the collecting costs, including all court costs and attorney's fees, the customer is liable for all loss.

The customer is entitled to to resell the goods, remaining our all property (conditional goods), in the ordinary course of its business. The demands of the purchaser from the disposal of the conditional goods (resale price including value added tax) is assigned to us now, irrespective of whether the conditional goods are disposed of with or without processing, or to one or more customers. The customer remains authorized to collect this claim even after the assignment. The authority to collect the claim ourself remains unaffected hereby. We are obligated to refrain from collecting the claim as long as the customer fulfils his payment obligations from the respective contractual relationship, does not become delayed in payment and, in particular, no application for the opening of insolvency proceedings has been filed or no suspension of payments has been affected. Should this, however, be the case, we may require from the customer to officially announce the assigned claims and their obligors, to provide all information necessary for collection, to hand over the related documents and to inform the obligors (third parties) of the assignment.

The processing or reorganization of the goods shall be only carried out by the customer. If the goods have been processed with others, which not belong to us, we shall receive a co-ownership of the newly produced goods which corresponds to the value of the goods (final invoice amount, incl. VAT) to the other processed objects at the time of processing. With respect to the object arising through the processing, the same shall apply as to goods which were delivered conditionally.

If the goods have been mixed or combined with others objects, which not belong to us, we shall receive a co-ownership of the newly produced goods which corresponds to the value of the goods (final invoice amount, incl. VAT) to the other combined objects at the time of combining. If after the combination the produced goods regards as a main issue, the customer shall transfer to us a co-ownership according to interest as agreed. The buyer shall keep custody of these objects for us.

The customer herewith assigns to us all claims for the securing our claims against him which arise from the connection of the goods with a real property to third parties.

We undertake to release the securities we are entitled to upon request of the customer insofar as the value which can be realised from our securities exceeds the claims to be secured by more than 10 %. The selection of the securities to be released shall be is incumbent upon us.

VII. Warranty

The customer must check the delivery at reception and inform us immediately, in writing, in the case of of obvious or visible damages.

The notice of visible damage is timely if we receive such notification within 2 weeks of delivery.

Not recognizable defects shall be reported in writing to us within 2 weeks after discovery. Warranty claims must be asserted within 5 days after receipt of goods via certified mail, otherwise any warranty claims will expire.

Insofar as a warranty claim exists, we reserve the right at our discretion either to remedy the faulty parts or to replace the delivery item or defective part with a fault free part. If we decide for rectification of defects, the customer has no right to reduce of the purchase price or to cancel the contract, as long as the rectification of defects is not fail. The rectification of defects fails to occur after second trying. The customer is entitled to a reduction of the purchase price or to canceling the contract only if the replacement delivery or the rectification of defects in individual cases is not possible.

VIII. Liability

If the customer asserts a claim, we shall be liable according to the statutory provisions for damages due to wilful action or gross negligence, including wilful action or gross negligence of our factors, servants and assignees. Is long as we are not charged with intentional infringement of the contract, the liability for damage is restricted to the foreseeable damage which typically occurs.

We shall be liable according to the statutory provisions, if we culpably violate a contractual obligation; in this case the liabiliaty remains limited to foreseeable damage which typically occurs.

The liability due to culpable injury of life, body or health shall remain unaffected. This shall also apply to the mandatory liability according to the Product Liability Law.

Unless otherwise agreed in writing, any further liability shall be excluded

IX. Limitation Period

The period of limitation with respect to claims based on defects amounts to 12 months, starting from the date of the passing of risk.

The period of limitation in the case of a delivery recourse in accordance with §§ 478, 479 of the German Civil Code shall remain unaffected for a period of five years calculated from the delivery of the defective good.

X. Place of jurisdiction, place of fullfilment

The place of jurisdiction for all disputed is our business location; however, we are also entitled to sue the buyer at the court in his domicile. at his place of residence

This agreement is subject to the laws of the Federal Republic of Germany. The terms of the UN Sales Convention do not apply. The laws of the Federal Republic of Germany shall also apply to the international trade.

Unless otherwise specified in the order confirmation, the our business location is the the place of fullfilment.

XI. Final Clauses

We have no liability if by export of ours goods by buyers into zones outside of the Federal Republic of Germany patent rights of third will be injure through our products. The buyer is obligated indemnity for a loss, which is caused by the export of delivered by us goods without our special permission for the export.

The supplier reserves the intellectual property rights in all drawings, photo, Soft- and hardware, sketches and pattern deliveries. The buyer may use them only for the arranged purpose and may not reproduce it without acceptance of the supplier or make accessibly third persons.

We hereby notify that personal data of the signatory are stored to the extent permissible pursuant to the §26 Federal Data Protection Act [Bundesdatenschutzgesetz - BDSG].

Last Update: 01/2013

Delivery and Payment Terms (Short form A-Z)

Order acceptance
Orders may be placed in writing, by telephone, by fax or via e-mail. Please state the quantity required, article description and invoice and delivery address.

Customer discount
Major customers receive an individual customer discount based on the amount of their purchase volume. This comprises 5 individual discounts for the respective product groups and is only possible by prior agreement with us.

Terms and Conditions of Delivery
Our Terms and Conditions of Delivery are based on the Standard Terms and Conditions for the Supply of Goods and Services issued by the Association of the German Electrical and Electronics Industry as amended. Delivery takes place ex works exclusive of packaging, transport costs and value added tax at the relevant statutory rate. Goods are shipped by a parcel delivery service or forwarding agent selected by us. Divergent Terms and Conditions of the customer are excluded and do not need to be expressly countermanded on our part.

Delivery times
Most standard articles can be supplied from stock subject to goods being unsold. All delivery times are confirmed via electronic confirmation of order. Such confirmation is non-binding. Delivery times are calculated from the time of receipt of payment in the case of prepayment and from the time of receipt of order in the case of cash on delivery or payment against invoice.

Prices
Our range of products is exclusively aimed at commercial customers, and for this reason the prices included on our price lists and on our websites are shown as net prices in euro. Value Added Tax is charged at the rate applicable on the day of delivery.

Returns
Customers must provide prior notification of product returns in writing or by telephone. We will only accept returns of articles in their original packaging and in mint condition within 10 working days and by prior written agreement. In cases where we approve a return of goods, you will receive a returns form which must be affixed to the package. In the event that the reason for the return of goods is not our responsibility, our policy is to credit 70% only of the value of the product. Costs of postage and packaging will not be reimbursed. Customised goods are generally excluded from exchange. Only goods sent carriage paid will be accepted.

Costs of postage and packaging
Costs of postage and packaging vary depending on country of destination. Please see our table listing costs of dispatch.

Conditions of payment
You may choose between the following payment terms:

- Invoice
- Prepayment
- Cash on delivery

Collection fees for the cash on delivery service are € 6.50 in Germany and € 15.50 in other EU countries.

Imprint
© Copyright by FuehlerSysteme eNET International GmbH
The information on these web pages is handled and checked by us very carefully. Nevertheless the provided information non-committal and we don't assume any liability for topicality, completeness and correctness. We reserve the right to carry out changes or additions at any time. All information without guarantee, technical changes and price changes reserved.

Our detailed General Terms and Conditions apply exclusively in the most recent version.

2020-K01-EN-R02

	SKU	Page	Dimensions	Connection	Price Table
A	AD/A	p.136	p.350 #085	p.303 #029	p.376
	ADF/A	p.145	p.351 #088	p.304 #031	p.376
	AF1/E	p.41	p.322 #003	p.294 #001	p.376
	AF2/E	p.41	p.323 #004	p.294 #001	p.377
	AM1/E	p.68	p.322 #003	p.295 #004	p.377
	AM2/E	p.69	p.323 #004	p.295 #004	p.378
	AM5/E	p.70	p.337 #046	p.295 #004	p.378
	ASF/E	p.58	p.334 #037	p.294 #001	p.378
B	BF1/E	p.42	p.323 #005	p.294 #001	p.379
	BF1/T	p.89	p.340 #056	-	p.380
	BF2/E	p.42	p.323 #006	p.294 #001	p.380
	BF2/T	p.89	p.340 #057	-	p.381
	BFA/A	p.190	p.354 #098	p.312 #056	p.382
	BFD2/A	p.193	p.355 #101	p.313 #058	p.382
	BFD/A	p.192	p.355 #100	p.312 #056	p.382
	BFR/A	p.191	p.354 #099	p.312 #027	p.382
	BHA/A	p.194	p.355 #102	p.313 #059	p.382
	BHR/A	p.195	p.356 #103	p.313 #060	p.382
	BHT-D/A	p.196	p.356 #104	p.314 #061	p.383
	BN/E	p.219	p.361 #118	-	p.383
C	CO2-A/A	p.158	p.350 #085	p.306 #039	p.384
	CO2-K/A	p.161	p.352 #091	p.306 #039	p.385
	CO2-M/A	p.149	p.351 #089	p.304 #032	p.385
	CO2-P/A	p.168	p.352 #092	p.309 #046	p.385
	CO2-R/A	p.164	p.333 #034	p.307 #042	p.386
	CO2T-A/A	p.159	p.351 #090	p.307 #040	p.386
	CO2T-K/A	p.162	p.352 #091	p.307 #040	p.387
	CO2T-R/A	p.165	p.333 #034	p.308 #043	p.387
	CO2-U/A	p.167	p.339 #054	p.308 #045	p.386
	CO2VOC-A/A	p.160	p.350 #085	p.307 #041	p.388
	CO2VOC-K/A	p.163	p.352 #091	p.307 #041	p.388
	CO2VOC-R/A	p.166	p.333 #034	p.308 #044	p.389
	CO-A/A	p.172	p.350 #085	p.309 #047	p.383
	CO-K/A	p.173	p.352 #091	p.309 #047	p.383
	CO-M/A	p.149	p.351 #089	p.304 #033	p.384
	CO-R/A	p.174	p.333 #034	p.310 #049	p.384
	COT-A/A	p.172	p.351 #090	p.309 #048	p.389
	COT-K/A	p.173	p.352 #091	p.309 #048	p.390
	COT-R/A	p.174	p.333 #034	p.310 #050	p.390
D	DF/E	p.58	p.333 #036	p.294 #001	p.391
	DMU2/A	p.135	p.349 #084	p.303 #029	p.392
	DMU/A	p.134	p.349 #083	p.303 #029	p.391
	DTA/D	p.225	p.364 #127	-	p.393
	DT/D	p.145	p.351 #088	p.304 #031	p.392
	DT/G	p.218	-	-	p.393
	DW/H	p.143	p.350 #086	p.303 #030	p.394
E	EF1/E	p.43	p.324 #007	p.294 #001	p.394
	EF2/E	p.43	p.324 #008	p.294 #001	p.394
	EF3/E	p.44	p.324 #009	p.294 #001	p.395
	EF4/E	p.44	p.325 #010	p.294 #001	p.395
	EF4/T	p.90	p.325 #010	p.296 #008	p.395
	EF5/E	p.45	p.325 #011	p.294 #001	p.395
	EF6/E	p.45	p.325 #012	p.294 #001	p.396
	EF7/E	p.46	p.326 #013	p.294 #002	p.396
	EF8/E	p.46	p.326 #014	p.294 #003	p.396
	EM2/E	p.72	p.324 #008	p.295 #004	p.398
	EM3/E	p.73	p.337 #047	p.295 #005	p.398
	EM4/E	p.74	p.325 #010	p.295 #005	p.398
	EM5/E	p.76	p.337 #048	p.295 #004	p.399
	EM/E	p.71	p.324 #007	p.295 #004	p.397
	FS1001	p.244	p.362 #123	p.317 #068	p.399

	SKU	Page	Dimensions	Connection	Price Table
F	FS1002	p.244	p.364 #129	p.317 #068	p.400
	FS1021	p.245	p.329 #022	p.317 #068	p.400
	FS1022	p.245	p.365 #130	p.317 #068	p.400
	FS1023	p.246	p.365 #131	p.317 #068	p.401
	FS1030	p.246	p.330 #026	p.317 #068	p.401
	FS1040	p.247	p.365 #132	p.317 #068	p.401
	FS1041	p.247	p.365 #132	p.317 #068	p.402
	FS1042	p.248	p.366 #133	p.317 #068	p.402
	FS1043	p.248	p.366 #134	p.317 #068	p.402
	FS1050	p.249	p.366 #135	p.317 #068	p.403
	FS1051	p.249	p.367 #136	p.317 #068	p.403
	FS1052	p.250	p.367 #137	p.317 #068	p.403
	FS1053	p.250	p.367 #138	p.317 #068	p.404
	FS1060	p.251	p.368 #139	p.317 #068	p.404
	FS1080	p.251	p.333 #034	p.318 #069	p.404
	FS1100	p.258	p.368 #141	p.317 #068	p.404
	FS1101	p.259	p.368 #141	p.317 #068	p.405
	FS1120	p.260	p.369 #142	p.317 #068	p.405
	FS1121	p.261	p.369 #142	p.317 #068	p.406
	FS1135	p.262	p.374 #158	p.317 #068	p.406
	FS1140	p.263	p.369 #143	p.317 #068	p.406
	FS1141	p.264	p.369 #144	p.317 #068	p.407
	FS1180	p.265	p.333 #034	p.318 #069	p.407
	FS1200	p.268	p.370 #145	p.317 #068	p.408
	FS1205	p.269	p.370 #146	p.317 #068	p.409
	FS1300	p.272	p.370 #147	p.317 #068	p.409
	FS1301	p.273	p.370 #147	p.317 #068	p.410
	FS1308	p.279	p.373 #156	p.317 #068	p.411
	FS1309	p.281	p.374 #157	p.317 #068	p.411
	FS1320	p.274	p.371 #148	p.317 #068	p.412
	FS1321	p.275	p.371 #148	p.317 #068	p.413
	FS1380	p.276	p.333 #034	p.318 #069	p.414
	FS1381	p.277	p.333 #034	p.318 #069	p.415
	FS1420	p.284	p.371 #149	p.317 #068	p.416
	FS1421	p.284	p.371 #149	p.317 #068	p.416
	FS1500	p.288	p.371 #150	p.317 #068	p.417
	FS1540	p.289	p.372 #151	p.317 #068	p.418
	FS1580	p.289	p.356 #103	p.318 #069	p.418
	FS1600	p.235	-	-	p.235
	FS1701	p.292	p.374 #159	p.319 #074	p.419
	FS1702	p.292	p.375 #160	p.320 #075	p.419
	FS1703	p.293	p.375 #161	p.320 #076	p.419
	FS1704	p.293	p.375 #152	p.320 #077	p.419
	FS3101	p.117	p.372 #152	p.301 #023	p.420
	FS3110	p.112	p.348 #081	p.301 #022	p.420
	FS3130	p.112	p.347 #077	p.301 #022	p.420
	FS3135	p.123	p.348 #079	p.301 #024	p.421
	FS3540	p.139	p.372 #153	p.319 #072	p.421
	FS3610	p.142	p.350 #087	p.303 #030	p.422
	FS4309	p.179	p.373 #155	p.319 #073	p.422
	FS4408	p.177	p.373 #154	p.306 #039	p.422
	FS5020	p.184	p.353 #095	p.311 #053	p.423
	FS5021	p.184	p.353 #095	p.311 #053	p.424
	FS6001	p.203	p.357 #108	-	p.425
	FS6002	p.204	p.358 #109	-	p.425
	FS6003	p.205	p.358 #110	-	p.425
G/H	GSM/O	p.215	p.360 #117	-	p.426
	HE/E	p.47	p.326 #015	p.294 #001	p.426
	HE/T	p.90	p.341 #058	-	p.426
	HET/E	p.47	p.327 #016	p.294 #001	p.426
	HFA/A	p.197	p.356 #105	p.314 #062	p.427

	SKU	Page	Dimensions	Connection	Price Table
H/K	HFD/A	p.199	p.357 #107	p.314 #062	p.427
	HFR/A	p.198	p.357 #106	p.315 #064	p.427
	KF1/E	p.50	p.329 #022	p.294 #001	p.428
	KF2/E	p.51	p.329 #023	p.294 #001	p.428
	KF3/E	p.51	p.329 #024	p.294 #001	p.428
	KL/A	p.152	p.347 #076	p.305 #034	p.428
	KLT/A	p.152	p.347 #076	p.305 #034	p.429
	KM/E	p.79	p.329 #022	p.295 #004	p.429
	KP/E	p.48	p.327 #017	p.294 #001	p.430
	KS/B-1W	p.254	p.368 #140	p.318 #071	p.430
	KS/E	p.48	p.327 #018	p.294 #001	p.430
	KSM/E	p.77	p.338 #049	p.295 #004	p.431
	KS/T	p.91	p.341 #059	-	p.431
	KSt/E	p.49	p.328 #019	p.294 #001	p.432
	KT/E	p.49	p.328 #020	p.294 #001	p.432
	KTM/E	p.78	p.338 #049	p.295 #004	p.432
	KV/E	p.219	p.361 #119	-	p.432
L	LF1/E	p.40	p.322 #001	p.294 #001	p.433
	LF2/B-1W	p.254	p.322 #002	p.318 #070	p.434
	LF2/E	p.40	p.322 #002	p.294 #001	p.434
	LM1/E	p.66	p.336 #045	p.295 #004	p.435
	LM2/E	p.67	p.322 #002	p.295 #004	p.435
	LP/E	p.50	p.328 #021	p.294 #001	p.436
M	MF/E	p.52	p.330 #026	p.294 #001	p.436
	MFL/E	p.220	p.361 #120	-	p.436
	MJG/E	p.93	p.342 #061	-	p.437
	MJP/E	p.92	p.342 #061	-	p.437
	MJS/E	p.92	p.342 #061	-	p.438
	MKG/E	p.94	p.342 #061	-	p.438
	MKP/E	p.93	p.342 #061	-	p.439
	MKS/E	p.94	p.342 #061	-	p.439
	MLS/E	p.95	p.342 #061	-	p.440
	MM/E	p.80	p.330 #026	p.295 #004	p.441
	MT1/T	p.91	p.341 #060	-	p.441
	MUB/E	p.221	p.362 #122	p.316 #066	p.442
	MUD/E	p.222	p.362 #123	p.317 #067	p.442
	MUH/E	p.220	p.362 #121	p.315 #065	p.442
	MWT/E	p.52	p.330 #025	p.294 #001	p.443
N/O	NW1/O	p.208	p.359 #112	-	p.444
	NW/O	p.209	p.358 #111	-	p.444
	OF1/E	p.53	p.330 #027	p.294 #001	p.444
	OF2/E	p.53	p.331 #028	p.294 #001	p.444
	OF3/E	p.54	p.331 #029	p.294 #001	p.445
	OF4/E	p.54	p.331 #030	p.294 #001	p.445
	OF5/E	p.55	p.331 #029	p.294 #001	p.445
	OF6/E	p.55	p.332 #031	p.294 #001	p.446
	OF7/E	p.56	p.332 #032	p.294 #001	p.446
	OM1/E	p.81	p.338 #050	p.295 #004	p.446
	OM3/E	p.82	p.338 #051	p.295 #004	p.447
	OM4/E	p.83	p.339 #052	p.295 #004	p.447
R	RAF/A	p.106	p.346 #074	p.300 #020	p.448
	RAF(H)/A	p.106	p.346 #075	p.300 #020	p.448
	RAF/M	p.131	p.346 #074	p.303 #028	p.448
	RAFT/A	p.116	p.346 #074	p.301 #023	p.449
	RAFT(H)/A	p.118	p.346 #075	p.301 #023	p.449
	RAFTP/A	p.119	p.346 #074	p.301 #024	p.449
	RDF/A	p.109	p.348 #080	p.300 #020	p.450
	RDFT/A	p.128	p.348 #080	p.301 #023	p.451
	RF1/R	p.98	p.342 #063	p.296 #009	p.452
	RF2/R	p.98	p.343 #064	p.297 #010	p.452
	RF3/R	p.99	p.343 #065	p.297 #011	p.452

	SKU	Page	Dimensions	Connection	Price Table
R	RF4/R	p.99	p.343 #066	p.297 #012	p.453
	RF5/R	p.100	p.344 #067	p.298 #013	p.453
	RF6/R	p.100	p.344 #068	p.298 #014	p.454
	RF/B-1W	p.255	p.333 #034	p.318 #070	p.451
	RF/E	p.57	p.333 #034	p.294 #001	p.451
	RKF/A	p.107	p.347 #076	p.300 #020	p.455
	RKF(H)/A	p.107	p.347 #077	p.300 #020	p.454
	RKF/M	p.131	p.347 #076	p.303 #028	p.455
	RKFT/A	p.120	p.347 #076	p.301 #023	p.456
	RKFT(H)/A	p.121	p.347 #077	p.301 #023	p.455
	RKFTP/A	p.122	p.347 #076	p.301 #024	p.456
	RL2/A	p.154	p.333 #034	p.306 #037	p.457
	RL/A	p.153	p.333 #034	p.305 #035	p.457
	RLT/A	p.153	p.333 #034	p.305 #036	p.457
	RLU/A	p.154	p.339 #054	p.306 #038	p.457
	RM2/E	p.75	p.325 #010	p.295 #005	p.458
	RRF/A	p.108	p.333 #034	p.300 #021	p.458
	RRF(P)/A	p.108	p.347 #078	p.300 #020	p.458
	RRFT/A	p.124	p.333 #034	p.302 #025	p.459
	RRFT(P)/A	p.126	p.347 #078	p.301 #023	p.459
	RRFTP/A	p.125	p.333 #034	p.302 #026	p.460
	RRFTP(P)/A	p.127	p.347 #078	p.301 #024	p.460
	RSF/E	p.59	p.334 #038	p.294 #001	p.462
	RTM1/E	p.85	p.333 #034	p.295 #006	p.462
S	SAS/D	p.225	-	-	p.462
	SB/E	p.227	p.364 #128	-	p.463
	SRW/N	p.187	p.353 #096	p.311 #054	p.463
	ST	p.226	-	-	p.377
	ST/E	p.224	-	-	p.432
	ST-P-OM	p.181	p.353 #094	p.311 #052	p.463
	SWS/A	p.224	p.363 #126	-	p.464
	SZ/E	p.228	-	-	p.464
T	TF1/B-1W	p.255	p.335 #040	p.318 #070	p.465
	TF1/E	p.60	p.335 #040	p.294 #001	p.465
	TF4/E	p.60	p.335 #041	p.294 #001	p.466
	TF5/E	p.61	p.335 #042	p.294 #001	p.466
	TF7/E	p.61	p.336 #043	p.294 #002	p.466
	TF8/E	p.62	p.336 #044	p.294 #003	p.467
	TH3/Z	p.223	p.363 #125	-	p.467
	TPF1/E	p.59	p.334 #039	p.294 #001	p.468
	TPF2/E	p.56	p.332 #033	p.294 #001	p.468
	TPK/E	p.95	p.342 #062	-	p.469
	TPM1/E	p.87	p.340 #055	p.295 #004	p.469
	TPM2/E	p.84	p.339 #053	p.295 #004	p.469
	TW/A	p.129	p.349 #082	p.302 #027	p.470
U	UG-5	p.181	p.352 #093	p.310 #051	p.463
	UG-B	p.226	-	-	p.470
	UG-COVER	p.227	-	-	p.470
	UM1/E	p.86	p.339 #054	p.296 #007	p.471
	UP1/E	p.57	p.333 #035	p.294 #001	p.471
	UP1/R	p.101	p.344 #069	p.298 #015	p.471
	UP2/R	p.101	p.345 #070	p.299 #016	p.472
	UP3/R	p.102	p.345 #071	p.299 #017	p.472
	UP4/R	p.102	p.345 #072	p.299 #018	p.473
	UP5/R	p.103	p.346 #073	p.300 #019	p.473
W	WFR/N	p.187	p.354 #097	p.312 #055	p.474
	WG2/O	p.211	p.359 #113	-	p.474
	WG/O	p.212	p.359 #114	-	p.474
	WRG2/O	p.213	p.360 #115	-	p.474
	WRG/O	p.213	p.360 #116	-	p.474
Z	ZM/O	p.216	-	-	p.474
	ZT/E	p.223	p.363 #124	-	p.475